BS EN ISO 6892-1:2019

BSI Standards Publication

Metallic materials — Tensile testing

Part 1: Method of test at room temperature

Licensed copy: Brighton University User, University of Brighton, Version correct as of 10/09/2020

Licensed copy: Brighton University User, University of Brighton, Version correct as of 10/09/2020

National foreword

This British Standard is the UK implementation of EN ISO 6892-1:2019. It is identical to ISO 6892-1:2019. It supersedes BS EN ISO 6892-1:2016, which is withdrawn.

The UK participation in its preparation was entrusted to Technical Committee ISE/101/1, Uniaxial and Ductility Testing.

A list of organizations represented on this committee can be obtained on request to its secretary.

This publication does not purport to include all the necessary provisions of a contract. Users are responsible for its correct application.

© The British Standards Institution 2020
Published by BSI Standards Limited 2020

ISBN 978 0 539 04735 6

ICS 77.040.10

Compliance with a British Standard cannot confer immunity from legal obligations.

This British Standard was published under the authority of the Standards Policy and Strategy Committee on 31 January 2020.

Amendments/corrigenda issued since publication

Date	Text affected

EUROPEAN STANDARD

NORME EUROPÉENNE

EUROPÄISCHE NORM

EN ISO 6892-1

December 2019

ICS 77.040.10

Supersedes EN ISO 6892-1:2016

English Version

Metallic materials - Tensile testing - Part 1: Method of test at room temperature (ISO 6892-1:2019)

Matériaux métalliques - Essai de traction - Partie 1: Méthode d'essai à température ambiante (ISO 6892-1:2019)

Metallische Werkstoffe - Zugversuch - Teil 1: Prüfverfahren bei Raumtemperatur (ISO 6892-1:2019)

This European Standard was approved by CEN on 12 November 2019.

CEN members are bound to comply with the CEN/CENELEC Internal Regulations which stipulate the conditions for giving this European Standard the status of a national standard without any alteration. Up-to-date lists and bibliographical references concerning such national standards may be obtained on application to the CEN-CENELEC Management Centre or to any CEN member.

This European Standard exists in three official versions (English, French, German). A version in any other language made by translation under the responsibility of a CEN member into its own language and notified to the CEN-CENELEC Management Centre has the same status as the official versions.

CEN members are the national standards bodies of Austria, Belgium, Bulgaria, Croatia, Cyprus, Czech Republic, Denmark, Estonia, Finland, France, Germany, Greece, Hungary, Iceland, Ireland, Italy, Latvia, Lithuania, Luxembourg, Malta, Netherlands, Norway, Poland, Portugal, Republic of North Macedonia, Romania, Serbia, Slovakia, Slovenia, Spain, Sweden, Switzerland, Turkey and United Kingdom.

EUROPEAN COMMITTEE FOR STANDARDIZATION
COMITÉ EUROPÉEN DE NORMALISATION
EUROPÄISCHES KOMITEE FÜR NORMUNG

CEN-CENELEC Management Centre: Rue de la Science 23, B-1040 Brussels

© 2019 CEN All rights of exploitation in any form and by any means reserved worldwide for CEN national Members.

Ref. No. EN ISO 6892-1:2019 E

Licensed copy: Brighton University User, University of Brighton, Version correct as of 10/09/2020

Licensed copy: Brighton University User, University of Brighton, Version correct as of 10/09/2020

European foreword

This document (EN ISO 6892-1:2019) has been prepared by Technical Committee ISO/TC 164 "Mechanical testing of metals" in collaboration with Technical Committee CEN/TC 459/SC 1 “Test methods for steel (other than chemical analysis)” the secretariat of which is held by AFNOR.

This European Standard shall be given the status of a national standard, either by publication of an identical text or by endorsement, at the latest by June 2020, and conflicting national standards shall be withdrawn at the latest by June 2020.

Attention is drawn to the possibility that some of the elements of this document may be the subject of patent rights. CEN shall not be held responsible for identifying any or all such patent rights.

This document supersedes EN ISO 6892-1:2016.

According to the CEN-CENELEC Internal Regulations, the national standards organizations of the following countries are bound to implement this European Standard: Austria, Belgium, Bulgaria, Croatia, Cyprus, Czech Republic, Denmark, Estonia, Finland, France, Germany, Greece, Hungary, Iceland, Ireland, Italy, Latvia, Lithuania, Luxembourg, Malta, Netherlands, Norway, Poland, Portugal, Republic of North Macedonia, Romania, Serbia, Slovakia, Slovenia, Spain, Sweden, Switzerland, Turkey and the United Kingdom.

Endorsement notice

The text of ISO 6892-1:2019 has been approved by CEN as EN ISO 6892-1:2019 without any modification.

Contents

Page

Foreword ..... **v**
Introduction ..... **vi**
1 Scope **1**
2 Normative references **1**
3 Terms and definitions **1**
4 Symbols **6**
5 Principle **8**
6 Test pieces **8**
6.1 Shape and dimensions 8
6.1.1 General 8
6.1.2 Machined test pieces 9
6.1.3 Unmachined test pieces 9
6.2 Types 9
6.3 Preparation of test pieces 10
7 Determination of original cross-sectional area **10**
8 Original gauge length and extensometer gauge length **10**
8.1 Choice of the original gauge length 10
8.2 Marking the original gauge length 10
8.3 Choice of the extensometer gauge length 11
9 Accuracy of testing apparatus **11**
10 Conditions of testing **11**
10.1 Setting the force zero point 11
10.2 Method of gripping 11
10.3 Testing rates 12
10.3.1 General information regarding testing rates 12
10.3.2 Testing rate based on strain rate (method A) 12
10.3.3 Testing rate based on stress rate (method B) 14
10.3.4 Report of the chosen testing conditions 15
11 Determination of the upper yield strength **16**
12 Determination of the lower yield strength **16**
13 Determination of proof strength, plastic extension **16**
14 Determination of proof strength, total extension **17**
15 Method of verification of permanent set strength **17**
16 Determination of the percentage yield point extension **17**
17 Determination of the percentage plastic extension at maximum force **17**
18 Determination of the percentage total extension at maximum force **18**
19 Determination of the percentage total extension at fracture **18**
20 Determination of percentage elongation after fracture **18**
21 Determination of percentage reduction of area **19**
22 Test report **20**
23 Measurement uncertainty **20**
23.1 General 20
23.2 Test conditions 21
23.3 Test results 21

Licensed copy: Brighton University User, University of Brighton, Version correct as of 10/09/2020

© ISO 2019 – All rights reserved

Annex A (informative) **Recommendations concerning the use of computer-controlled tensile testing machines** **34**

Annex B (normative) **Types of test pieces to be used for thin products: sheets, strips, and flats between 0,1 mm and 3 mm thick** **40**

Annex C (normative) **Types of test pieces to be used for wire, bars, and sections with a diameter or thickness of less than 4 mm** **43**

Annex D (normative) **Types of test pieces to be used for sheets and flats of thickness equal to or greater than 3 mm and wire, bars, and sections of diameter or thickness equal to or greater than 4 mm** **44**

Annex E (normative) **Types of test pieces to be used for tubes** **48**

Annex F (informative) **Estimation of the crosshead separation rate in consideration of the stiffness (or compliance) of the testing equipment** **50**

Annex G (normative) **Determination of the modulus of elasticity of metallic materials using a uniaxial tensile test** **52**

Annex H (informative) **Measuring the percentage elongation after fracture if the specified value is less than 5 %** **61**

Annex I (informative) **Measurement of percentage elongation after fracture based on subdivision of the original gauge length** **62**

Annex J (informative) **Determination of the percentage plastic elongation without necking, A_{wn}, for long products such as bars, wire, and rods** **64**

Annex K (informative) **Estimation of the uncertainty of measurement** **65**

Annex L (informative) **Precision of tensile testing — Results from interlaboratory programmes** **69**

Bibliography **76**

Licensed copy: Brighton University User, University of Brighton, Version correct as of 10/09/2020

© ISO 2019 – All rights reserved

Licensed copy: Brighton University User, University of Brighton, Version correct as of 10/09/2020

Foreword

ISO (the International Organization for Standardization) is a worldwide federation of national standards bodies (ISO member bodies). The work of preparing International Standards is normally carried out through ISO technical committees. Each member body interested in a subject for which a technical committee has been established has the right to be represented on that committee. International organizations, governmental and non-governmental, in liaison with ISO, also take part in the work. ISO collaborates closely with the International Electrotechnical Commission (IEC) on all matters of electrotechnical standardization.

The procedures used to develop this document and those intended for its further maintenance are described in the ISO/IEC Directives, Part 1. In particular, the different approval criteria needed for the different types of ISO documents should be noted. This document was drafted in accordance with the editorial rules of the ISO/IEC Directives, Part 2 (see www.iso.org/directives).

Attention is drawn to the possibility that some of the elements of this document may be the subject of patent rights. ISO shall not be held responsible for identifying any or all such patent rights. Details of any patent rights identified during the development of the document will be in the Introduction and/or on the ISO list of patent declarations received (see www.iso.org/patents).

Any trade name used in this document is information given for the convenience of users and does not constitute an endorsement.

For an explanation of the voluntary nature of standards, the meaning of ISO specific terms and expressions related to conformity assessment, as well as information about ISO's adherence to the World Trade Organization (WTO) principles in the Technical Barriers to Trade (TBT) see www.iso.org/iso/foreword.html.

This document was prepared by Technical Committee ISO/TC 164, *Mechanical testing of metals*, Subcommittee SC 1, *Uniaxial testing*.

This third edition cancels and replaces the second edition (ISO 6892-1:2016), of which it constitutes a minor revision. The changes compared to the previous edition are as follows:

— correction of the title of a standard in Clause 2;

— correction of the designation "coefficient of determination" ("coefficient of determination" instead of "coefficient of correlation");

— correction of Formula (1);

— wording in 10.3.2.1;

— wording in the key of Figure 9;

— wording in Table B.2;

— wording in Table D.3;

— correction of the references.

A list of all parts in the ISO 6892 series can be found on the ISO website.

Any feedback or questions on this document should be directed to the user's national standards body. A complete listing of these bodies can be found at www.iso.org/members.html.

© ISO 2019 – All rights reserved

Introduction

During discussions concerning the speed of testing in the preparation of ISO 6892, it was decided to recommend the use of strain rate control in future revisions.

In this document, there are two methods of testing speeds available. The first, method A, is based on strain rates (including crosshead separation rate) and the second, method B, is based on stress rates. Method A is intended to minimize the variation of the test rates during the moment when strain rate sensitive parameters are determined and to minimize the measurement uncertainty of the test results. Therefore, and out of the fact that often the strain rate sensitivity of the materials is not known, the use of method A is strongly recommended.

NOTE In what follows, the designations “force” and “stress” or “extension”, “percentage extension”, and “strain”, respectively, are used on various occasions (as figure axis labels or in explanations for the determination of different properties). However, for a general description or point on a curve, the designations “force” and “stress” or “extension”, “percentage extension”, and “strain”, respectively, can be interchanged.

Licensed copy: Brighton University User, University of Brighton, Version correct as of 10/09/2020

© ISO 2019 – All rights reserved

INTERNATIONAL STANDARD **ISO 6892-1:2019(E)**

Metallic materials — Tensile testing —

Part 1: Method of test at room temperature

1 Scope

This document specifies the method for tensile testing of metallic materials and defines the mechanical properties which can be determined at room temperature.

NOTE Annex A contains further recommendations for computer controlled testing machines.

2 Normative references

The following documents are referred to in the text in such a way that some or all of their content constitutes requirements of this document. For dated references, only the edition cited applies. For undated references, the latest edition of the referenced document (including any amendments) applies.

ISO 7500-1, *Metallic materials — Calibration and verification of static uniaxial testing machines — Part 1: Tension/compression testing machines — Verification and calibration of the force-measuring system*

ISO 9513, *Metallic materials — Calibration of extensometer systems used in uniaxial testing*

3 Terms and definitions

For the purposes of this document, the following terms and definitions apply.

ISO and IEC maintain terminological databases for use in standardization at the following addresses:

— ISO Online browsing platform: available at https://www.iso.org/obp

— IEC Electropedia: available at http://www.electropedia.org/

3.1
gauge length
L
length of the parallel portion of the test piece on which elongation is measured at any moment during the test

3.1.1
original gauge length
L_o
length between *gauge length* (3.1) marks on the test piece measured at room temperature before the test

3.1.2
final gauge length after fracture
L_u
length between *gauge length* (3.1) marks on the test piece measured after rupture, at room temperature, the two pieces having been carefully fitted back together so that their axes lie in a straight line

© ISO 2019 – All rights reserved

Licensed copy: Brighton University User, University of Brighton, Version correct as of 10/09/2020

Licensed copy: Brighton University User, University of Brighton, Version correct as of 10/09/2020

3.2
parallel length
L_c
length of the parallel reduced section of the test piece

Note 1 to entry: The concept of parallel length is replaced by the concept of distance between grips for unmachined test pieces.

3.3
elongation
increase in the *original gauge length* (3.1.1) at any moment during the test

3.4
percentage elongation
elongation (3.3) expressed as a percentage of the *original gauge length* (3.1.1)

3.4.1
percentage permanent elongation
increase in the *original gauge length* (3.1.1) of a test piece after removal of a specified stress, expressed as a percentage of the *original gauge length* (3.1.1)

3.4.2
percentage elongation after fracture
A
permanent *elongation* (3.3) of the gauge length after fracture ($L_u - L_o$), expressed as a percentage of the *original gauge length* (3.1.1)

Note 1 to entry: For further information, see 8.1.

3.5
extensometer gauge length
L_e
initial gauge length of the extensometer used for measurement of *extension* (3.6)

Note 1 to entry: For the determination of several properties which are based (partly or complete) on extension, e. g. R_p, A_e or A_g, the use of an extensometer is mandatory.

Note 2 to entry: For further information, see 8.3.

3.6
extension
increase in the *extensometer gauge length* (3.5), at any moment during the test

3.6.1
percentage extension
strain
e
extension (3.6) expressed as a percentage of the *extensometer gauge length* (3.5)

Note 1 to entry: e is commonly called engineering strain.

3.6.2
percentage permanent extension
increase in the *extensometer gauge length* (3.5), after removal of a specified *stress* (3.10) from the test piece, expressed as a percentage of the extensometer gauge length

© ISO 2019 – All rights reserved

Licensed copy: Brighton University User, University of Brighton, Version correct as of 10/09/2020

3.6.3
percentage yield point extension
A_e
<discontinuous yielding materials> *extension* (3.6) between the start of yielding and the start of uniform work-hardening, expressed as a percentage of the *extensometer gauge length* (3.5)

Note 1 to entry: See Figure 7.

3.6.4
percentage total extension at maximum force
A_{gt}
total *extension* (3.6) (elastic extension plus plastic extension) at maximum force, expressed as a percentage of the *extensometer gauge length* (3.5)

Note 1 to entry: See Figure 1.

3.6.5
percentage plastic extension at maximum force
A_g
plastic *extension* (3.6) at maximum force, expressed as a percentage of the *extensometer gauge length* (3.5)

Note 1 to entry: See Figure 1.

3.6.6
percentage total extension at fracture
A_t
total *extension* (3.6) (elastic extension plus plastic extension) at the moment of fracture, expressed as a percentage of the *extensometer gauge length* (3.5)

Note 1 to entry: See Figure 1.

3.7
testing rate
rate (resp. rates) used during the test

3.7.1
strain rate
$\dot{e}_{L_e}$
increase of strain, measured with an extensometer, in *extensometer gauge length* (3.5), per time

3.7.2
estimated strain rate over the parallel length
$\dot{e}_{L_c}$
value of the increase of strain over the *parallel length* (3.2) of the test piece per time based on the *crosshead separation rate* (3.7.3) and the parallel length of the test piece

3.7.3
crosshead separation rate
v_c
displacement of the crossheads per time

3.7.4
stress rate
$\dot{R}$
increase of *stress* (3.10) per time

Note 1 to entry: Stress rate is only used in the elastic part of the test (method B) (see also 10.3.3).

© ISO 2019 – All rights reserved

Licensed copy: Brighton University User, University of Brighton, Version correct as of 10/09/2020

3.8
percentage reduction of area
Z
maximum change in cross-sectional area which has occurred during the test ($S_o - S_u$), expressed as a percentage of the original cross-sectional area, S_o:

$$Z = \frac{S_o - S_u}{S_o} \cdot 100$$

3.9 Maximum force

3.9.1
maximum force
F_m
<materials displaying no discontinuous yielding> highest force that the test piece withstands during the test

3.9.2
maximum force
F_m
<materials displaying discontinuous yielding> highest force that the test piece withstands during the test after the beginning of work-hardening

Note 1 to entry: For materials which display discontinuous yielding, but where no work-hardening can be established, F_m is not defined in this document [see footnote to Figure 8 c)].

Note 2 to entry: See Figure 8 a) and b).

3.10
stress
R
at any moment during the test, force divided by the original cross-sectional area, S_o, of the test piece

Note 1 to entry: All references to stress in this document are to engineering stress.

3.10.1
tensile strength
R_m
stress (3.10) corresponding to the *maximum force* (3.9.2)

3.10.2
yield strength
when the metallic material exhibits a yield phenomenon, *stress* (3.10) corresponding to the point reached during the test at which plastic deformation occurs without any increase in the force

3.10.2.1
upper yield strength
R_{eH}
maximum value of *stress* (3.10) prior to the first decrease in force

Note 1 to entry: See Figure 2.

3.10.2.2
lower yield strength
R_{eL}
lowest value of *stress* (3.10) during plastic yielding, ignoring any initial transient effects

Note 1 to entry: See Figure 2.

 © ISO 2019 – All rights reserved

Licensed copy: Brighton University User, University of Brighton, Version correct as of 10/09/2020

3.10.3
proof strength, plastic extension
R_p
stress (3.10) at which the plastic *extension* (3.6) is equal to a specified percentage of the *extensometer gauge length* (3.5)

Note 1 to entry: Adapted from ISO/TR 25679:2005, "proof strength, non-proportional extension".

Note 2 to entry: A suffix is added to the subscript to indicate the prescribed percentage, e.g. $R_{p0,2}$.

Note 3 to entry: See Figure 3.

3.10.4
proof strength, total extension
R_t
stress (3.10) at which total *extension* (3.6) (elastic extension plus plastic extension) is equal to a specified percentage of the *extensometer gauge length* (3.5)

Note 1 to entry: A suffix is added to the subscript to indicate the prescribed percentage, e.g. $R_{t0,5}$.

Note 2 to entry: See Figure 4.

3.10.5
permanent set strength
R_r
stress (3.10) at which, after removal of force, a specified permanent *elongation* (3.3) or *extension* (3.6), expressed respectively as a percentage of *original gauge length* (3.1.1), or *extensometer gauge length* (3.5), has not been exceeded

Note 1 to entry: A suffix is added to the subscript to indicate the specified percentage of the original gauge length, L_o, or of the extensometer gauge length, L_e, e.g. $R_{r0,2}$.

Note 2 to entry: See Figure 5.

3.11
fracture
phenomenon which is deemed to occur when total separation of the test piece occurs

Note 1 to entry: Criteria for fracture for computer controlled tests are given in Figure A.2.

3.12
computer-controlled tensile testing machine
machine for which the control and monitoring of the test, the measurements, and the data processing are undertaken by computer

3.13
modulus of elasticity
E
quotient of change of stress ΔR and change of percentage extension Δe in the range of evaluation, multiplied by 100 %

$$E = \frac{\Delta R}{\Delta e} \cdot 100\ \%$$

Note 1 to entry: It is recommended to report the value in GPa rounded to the nearest 0,1 GPa and according to ISO 80000-1.

3.14
default value
lower or upper value for *stress* (3.10), respectively *strain* (3.6.1), which is used for the description of the range where the *modulus of elasticity* (3.13) is calculated

© ISO 2019 – All rights reserved

Licensed copy: Brighton University User, University of Brighton, Version correct as of 10/09/2020

3.15
coefficient of determination
R^2
additional result of the linear regression which describes the quality of the stress-strain curve in the evaluation range

Note 1 to entry: The used symbol R^2 is a mathematical representation of regression and is no expression for a squared stress value.

3.16
standard deviation of the slope
S_m
additional result of the linear regression which describes the difference of the *stress* (3.10) values from the best fit line for the given *extension* (3.6.1) values in the evaluation range

3.17
relative standard deviation of the slope
$S_{m(rel)}$
quotient of the *standard deviation of the slope* (3.16) and the slope in the evaluation range, multiplied by 100 %

$$S_{m(rel)} = \frac{S_m}{E} \cdot 100\ \%$$

4 Symbols

The symbols used in this document and corresponding designations are given in Table 1.

Table 1 — Symbols and designations

Symbol	Unit	Designation
		Test piece
a_o, T^a	mm	original thickness of a flat test piece or wall thickness of a tube
b_o	mm	original width of the parallel length of a flat test piece or average width of the longitudinal strip taken from a tube or width of flat wire
d_o	mm	original diameter of the parallel length of a circular test piece, or diameter of round wire or internal diameter of a tube
D_o	mm	original external diameter of a tube
L_o	mm	original gauge length
L'_o	mm	initial gauge length for determination of A_{wn} (see Annex J)
L_c	mm	parallel length
L_e	mm	extensometer gauge length
L_t	mm	total length of test piece
L_u	mm	final gauge length after fracture
L'_u	mm	final gauge length after fracture for determination of A_{wn} (see Annex J)

[a] Symbol used in steel tube product standards.

[b] 1 MPa = 1 N mm^{-2}.

[c] The calculation of the modulus of elasticity is described in Annex G. It is not required to use Annex G to determine the slope of the elastic part of the stress-percentage extension curve for the determination of proof strength.

[d] In the elastic part of the stress-percentage extension curve, the value of the slope may not necessarily represent the modulus of elasticity. This value may closely agree with the value of the modulus of elasticity if optimal conditions are used (see Annex G).

CAUTION — The factor 100 is necessary if percentage values are used.

 © ISO 2019 – All rights reserved

Licensed copy: Brighton University User, University of Brighton, Version correct as of 10/09/2020

Table 1 *(continued)*

Symbol	Unit	Designation
S_o	mm^2	original cross-sectional area of the parallel length
S_u	mm^2	minimum cross-sectional area after fracture
k	—	coefficient of proportionality (see 6.1.1)
Z	%	percentage reduction of area
Elongation		
A	%	percentage elongation after fracture (see 3.4.2)
A_{wn}	%	percentage plastic elongation without necking (see Annex J)
Extension		
e	%	extension
A_e	%	percentage yield point extension
A_g	%	percentage plastic extension at maximum force, F_m
A_{gt}	%	percentage total extension at maximum force, F_m
A_t	%	percentage total extension at fracture
ΔL_m	mm	extension at maximum force
ΔL_f	mm	extension at fracture
Rates		
$\dot{e}_{L_e}$	s^{-1}	strain rate
$\dot{e}_{L_c}$	s^{-1}	estimated strain rate over the parallel length
$\dot{R}$	MPa s^{-1}	stress rate
v_c	mm s^{-1}	crosshead separation rate
Force		
F_m	N	maximum force
Yield strength — Proof strength — Tensile strength		
R	MPa[b]	stress
R_{eH}	MPa	upper yield strength
R_{eL}	MPa	lower yield strength
R_m	MPa	tensile strength
R_p	MPa	proof strength, plastic extension
R_r	MPa	specified permanent set strength
R_t	MPa	proof strength, total extension
Modulus of elasticity — slope of the stress-percentage extension curve		
E	GPa	modulus of elasticity[c]
m	MPa	slope of the stress-percentage extension curve at a given moment of the test
m_E	MPa	slope of the elastic part of the stress-percentage extension curve[d]
R_1	MPa	lower stress value
R_2	MPa	upper stress value

[a] Symbol used in steel tube product standards.

[b] 1 MPa = 1 N mm^{-2}.

[c] The calculation of the modulus of elasticity is described in Annex G. It is not required to use Annex G to determine the slope of the elastic part of the stress-percentage extension curve for the determination of proof strength.

[d] In the elastic part of the stress-percentage extension curve, the value of the slope may not necessarily represent the modulus of elasticity. This value may closely agree with the value of the modulus of elasticity if optimal conditions are used (see Annex G).

CAUTION — The factor 100 is necessary if percentage values are used.

© ISO 2019 – All rights reserved

Licensed copy: Brighton University User, University of Brighton, Version correct as of 10/09/2020

Table 1 *(continued)*

Symbol	Unit	Designation
e_1	%	lower strain value
e_2	%	upper strain value
R^2	—	coefficient of determination
S_m	MPa	standard deviation of the slope
$S_{m(rel)}$	%	relative standard deviation of the slope

[a] Symbol used in steel tube product standards.

[b] 1 MPa = 1 N mm^{-2}.

[c] The calculation of the modulus of elasticity is described in Annex G. It is not required to use Annex G to determine the slope of the elastic part of the stress-percentage extension curve for the determination of proof strength.

[d] In the elastic part of the stress-percentage extension curve, the value of the slope may not necessarily represent the modulus of elasticity. This value may closely agree with the value of the modulus of elasticity if optimal conditions are used (see Annex G).

CAUTION — The factor 100 is necessary if percentage values are used.

5 Principle

The test involves straining a test piece by tensile force, generally to fracture, for the determination of one or more of the mechanical properties defined in Clause 3.

The test shall be carried out at room temperature between 10 °C and 35 °C, unless otherwise specified. For laboratory environments outside the stated requirement, it is the responsibility of the testing laboratory to assess the impact on testing and/or calibration data produced with and for testing machines operated in such environments. When testing and calibration activities are performed outside the temperature limits of 10 °C and 35 °C, the temperature shall be recorded and reported. If significant temperature gradients are present during testing and/or calibration, measurement uncertainty may increase and out of tolerance conditions may occur.

Tests carried out under controlled conditions shall be made at a temperature of 23 °C ± 5 °C.

If the determination of the modulus of elasticity is requested in the tensile test, this shall be done in accordance with Annex G.

6 Test pieces

6.1 Shape and dimensions

6.1.1 General

The shape and dimensions of the test pieces may be constrained by the shape and dimensions of the metallic product from which the test pieces are taken.

The test piece is usually obtained by machining a sample from the product or a pressed blank or casting. However, products of uniform cross-section (sections, bars, wires, etc.) and also as-cast test pieces (i.e. for cast iron and non-ferrous alloys) may be tested without being machined.

The cross-section of the test pieces may be circular, square, rectangular, annular or, in special cases, some other uniform cross-section.

Preferred test pieces have a direct relationship between the original gauge length, L_o, and the original cross-sectional area, S_o, expressed by the formula $L_o = k\sqrt{S_o}$, where k is a coefficient of proportionality, and are called proportional test pieces. The internationally adopted value for k is 5,65. The original gauge length shall be not less than 15 mm. When the cross-sectional area of the test piece is too small

 © ISO 2019 – All rights reserved

for this requirement to be met with k = 5,65, a higher value (preferably 11,3) or a non-proportional test piece may be used.

NOTE By using an original gauge length smaller than 20 mm, the uncertainty of the result "elongation after fracture" will be increased.

For non-proportional test pieces, the original gauge length, L_o, is independent of the original cross-sectional area, S_o.

The dimensional tolerances of the test pieces shall be in accordance with Annexes B to E (see 6.2).

Other test pieces such as those specified in relevant product standards or national standards may be used by agreement with the customer, e.g. ISO 3183[1] (API 5L), ISO 11960[2] (API 5CT), ASTM A370[6], ASTM E8M[7], DIN 50125[10], IACS W2[13], and JIS Z 2241[14].

6.1.2 Machined test pieces

Machined test pieces shall incorporate a transition radius between the gripped ends and the parallel length if these have different dimensions. The dimensions of the transition radius are important and it is recommended that they be defined in the material specification if they are not given in the appropriate annex (see 6.2).

The gripped ends may be of any shape to suit the grips of the testing machine. The axis of the test piece shall coincide with the axis of application of the force.

The parallel length, L_c, or, in the case where the test piece has no transition radii, the free length between the grips, shall always be greater than the original gauge length, L_o.

6.1.3 Unmachined test pieces

If the test piece consists of an unmachined length of the product or of an unmachined test bar, the free length between the grips shall be sufficient for gauge marks to be at a reasonable distance from the grips (see Annexes B to E).

As-cast test pieces shall incorporate a transition radius between the gripped ends and the parallel length. The dimensions of this transition radius are important and it is recommended that they be defined in the product standard. The gripped ends may be of any shape to suit the grips of the testing machine provided that they enable the centre of the test piece to coincide with the axis of application of force. The parallel length, L_c, shall always be greater than the original gauge length, L_o.

6.2 Types

The main types of test pieces are defined in Annexes B to E according to the shape and type of product, as shown in Table 2. Other types of test pieces can be specified in product standards.

Licensed copy: Brighton University User, University of Brighton, Version correct as of 10/09/2020

Licensed copy: Brighton University User, University of Brighton, Version correct as of 10/09/2020

Table 2 — Main types of test pieces according to product type

Dimensions in millimetres

Type of product		Corresponding annex
Sheets — Plates — Flats	**Wire — Bars — Sections**	
	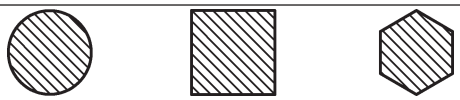	
Thickness a	**Diameter or side**	
$0{,}1 \leq a < 3$	—	B
—	<4	C
$a \geq 3$	≥4	D
Tubes		E

6.3 Preparation of test pieces

The test pieces shall be taken and prepared in accordance with the requirements of the relevant International Standards for the different materials (e.g. ISO 377).

7 Determination of original cross-sectional area

The relevant dimensions of the test piece should be measured at sufficient cross-sections perpendicular to the longitudinal axis in the central region of the parallel length of the test piece.

A minimum of three cross-sections is recommended.

The original cross-sectional area, S_o, is the average cross-sectional area and shall be calculated from the measurements of the appropriate dimensions.

The accuracy of this calculation depends on the nature and type of the test piece. Annexes B to E describe methods for the evaluation of S_o for different types of test pieces and contain specifications for the accuracy of measurement.

All measuring devices used for the determination of the original cross-sectional area shall be calibrated to the appropriate reference standards with traceability to a national measurement system.

8 Original gauge length and extensometer gauge length

8.1 Choice of the original gauge length

For proportional test pieces, if the original gauge length is not equivalent to $5{,}65\sqrt{S_o}$, where S_o is the original cross-sectional area of the parallel length, the symbol A should be supplemented by a subscript indicating the coefficient of proportionality used, e.g. $A_{11,3}$ indicates a percentage elongation of the gauge length, L_o, according to Formula (1):

$$L_o = 11{,}3\sqrt{S_o} \tag{1}$$

NOTE $5{,}65\sqrt{S_o} = 5\sqrt{4S_o/\pi}$.

For non-proportional test pieces (see Annex B and Annex D), the symbol A should be supplemented by a subscript indicating the original gauge length used, expressed in millimetres, e.g. $A_{80\ \mathrm{mm}}$ indicates a percentage elongation of a gauge length, L_o, of 80 mm.

© ISO 2019 – All rights reserved

Licensed copy: Brighton University User, University of Brighton, Version correct as of 10/09/2020

8.2 Marking the original gauge length

For the manual determination of the elongation after fracture A, each end of the original gauge length, L_o, shall be marked by means of fine marks, scribed lines, or punch marks, but not by marks which could result in premature fracture. The original gauge length shall be marked to an accuracy of ±1 %.

For proportional test pieces, the calculated value of the original gauge length may be rounded to the nearest multiple of 5 mm, provided that the difference between the calculated and marked gauge length is less than 10 % of L_o.

If the parallel length, L_c, is much greater than the original gauge length, as, for instance, with unmachined test pieces, a series of overlapping gauge lengths may be marked.

In some cases, it can be helpful to draw a line parallel to the longitudinal axis, along which the gauge lengths are marked.

8.3 Choice of the extensometer gauge length

For measurement of yield and proof strength parameters, L_e should span as much of the parallel length of the test piece as possible. Ideally, as a minimum, L_e should be greater than $0{,}50L_o$ but less than approximately $0{,}9L_c$. This should ensure that the extensometer detects all yielding events that occur in the test piece. Further, for measurement of parameters “at” or “after reaching” maximum force, L_e should be approximately equal to L_o.

9 Accuracy of testing apparatus

The force-measuring system of the testing machine shall be in accordance with ISO 7500-1, class 1, or better.

For the determination of proof strength (plastic or total extension), the extensometer used shall be in accordance with ISO 9513, class 1 or better, in the relevant range. For other properties (with extensions greater than 5 %), an ISO 9513, class 2 extensometer in the relevant range may be used.

10 Conditions of testing

10.1 Setting the force zero point

The force-measuring system shall be set to zero after the testing loading train has been assembled, but before the test piece is actually gripped at both ends. Once the force zero point has been set, the force-measuring system shall not be changed in any way during the test.

NOTE The use of this method ensures that, on one hand, the weight of the gripping system is compensated for in the force measurement, and on the other hand, any force resulting from the clamping operation does not affect this measurement.

10.2 Method of gripping

The test pieces shall be gripped by suitable means, such as wedges, screwed grips, parallel jaw faces, or shouldered holders.

Every endeavour should be made to ensure that test pieces are held in such a way that the force is applied as axially as possible, in order to minimize bending (more information is given in ASTM E1012[8], for example). This is of particular importance when testing brittle materials or when determining proof strength (plastic extension), proof strength (total extension), or yield strength.

In order to ensure the alignment of the test piece and grip arrangement, a preliminary force may be applied provided it does not exceed a value corresponding to 5 % of the specified or expected yield

© ISO 2019 – All rights reserved

strength. A correction of the extension should be carried out to take into account the effect of the preliminary force.

10.3 Testing rates

10.3.1 General information regarding testing rates

Unless otherwise agreed, the choice of method (A1, A2, or B) and test rates are at the discretion of the producer or the test laboratory assigned by the producer, provided that these meet the requirements of this document.

NOTE 1 The difference between Method A and Method B is that the necessary testing speed of Method A is defined at the point of interest (e.g. $R_{p0,2}$), where the property has to be determined, whereas, in Method B, the necessary testing speed is set in the elastic range before the property (e.g. $R_{p0,2}$) has to be determined.

Under certain conditions using Method B (e.g. for some steels a stress rate in the elastic range of approximately 30 MPa/s, using a testing rig and clamping system with high stiffness and a test piece geometry according to Annex B, Table B.1, Test piece type 2), a strain rate near the range 2 of Method A may be observed.

NOTE 2 Product standards and corresponding test standards (e.g. aerospace standards) can specify test rates that are different from those contained in this document.

10.3.2 Testing rate based on strain rate (method A)

10.3.2.1 General

Method A is intended to minimize the variation of the test rates during the moment when strain rate sensitive parameters are determined and to minimize the measurement uncertainty of the test results.

Two different types of strain rate control are described in this subclause.

— Method A1 closed loop involves the control of the strain rate itself, $\dot{e}_{L_e}$, that is based on the feedback obtained from an extensometer.

— Method A2 open loop involves the control of the estimated strain rate over the parallel length, $\dot{e}_{L_c}$, which is achieved by using the crosshead separation rate calculated by multiplying the required strain rate by the parallel length [see Formula (2)].

NOTE A more rigorous strain rate estimation procedure for Method A2 is described in Annex F.

If a material shows no discontinuous yielding and the force remains nominally constant, the strain rate, $\dot{e}_{L_e}$, and the estimated strain rate over the parallel length, $\dot{e}_{L_c}$, are approximately equal. Differences exist if the material exhibits discontinuous or serrated yielding (e.g. some steels and AlMg alloys in the yield point extension range, or materials which show serrated yielding like the Portevin-Le Chatelier effect) or if necking occurs. If the force is increasing, the strain rate [if the crosshead separation rate is calculated using Formula (2)] may be below the target strain rate due to the compliance of the testing machine.

The testing rate shall conform to the following requirements.

a) Unless otherwise specified, any convenient speed of testing may be used up to a stress equivalent to half of the expected yield strength. Above this range and for the determination of R_{eH}, R_p or R_t, the specified strain rate, $\dot{e}_{L_e}$ (or for Method A2 the crosshead separation rate v_c), shall be applied. In this range, to eliminate the influence of the compliance of the tensile testing machine, the use of an extensometer measuring the extension of the test piece is necessary to have accurate control over the strain rate. For testing machines unable to control by strain rate, method A2 may be used.

© ISO 2019 – All rights reserved

Licensed copy: Brighton University User, University of Brighton, Version correct as of 10/09/2020

Licensed copy: Brighton University User, University of Brighton, Version correct as of 10/09/2020

b) During discontinuous yielding, the estimated strain rate over the parallel length, $\dot{e}_{L_c}$ (see 3.7.2), should be applied. In this range, it is impossible to control the strain rate using the extensometer clamped on to the test piece because local yielding can occur outside the extensometer gauge length. The required estimated strain rate over the parallel length may be maintained in this range sufficiently accurately using a constant crosshead separation rate, v_c (see 3.7.3) (open loop).

$$v_c = L_c \, \dot{e}_{L_c} \tag{2}$$

where

$\dot{e}_{L_c}$ is the estimated strain rate over the parallel length;

L_c is the parallel length.

c) In the range following R_p or R_t or end of yielding (see 3.7.2), $\dot{e}_{L_e}$ or $\dot{e}_{L_c}$ can be used. The use of $\dot{e}_{L_c}$ is recommended to avoid any control problems which may arise if necking occurs outside the extensometer gauge length.

The strain rates specified in 10.3.2.2 to 10.3.2.4 shall be maintained during the determination of the relevant material property (see also Figure 9).

During switching to another strain rate or to another control mode, no discontinuities in the stress-strain curve should be introduced which distort the values of R_m, A_g, or A_{gt} (see Figure 10). This effect can be reduced by a suitable gradual switch between the rates.

The shape of the stress-strain curve in the work-hardening range can also be influenced by the strain rate. The testing rate used should be documented (see 10.3.4).

10.3.2.2 Strain rate for the determination of the upper yield strength, R_{eH}, or proof strength properties, R_p and R_t

The strain rate, $\dot{e}_{L_e}$, shall be kept as constant as possible up to and including the determination of R_{eH} or R_p or R_t. During the determination of these material properties, the strain rate, $\dot{e}_{L_e}$, shall be in one of the two following specified ranges (see also Figure 9).

Range 1: $\dot{e}_{L_e}$ = 0,000 07 s^{-1}, with a relative tolerance of ±20 %.

Range 2: $\dot{e}_{L_e}$ = 0,000 25 s^{-1}, with a relative tolerance of ±20 % (recommended, unless otherwise specified).

If the testing machine is not able to control the strain rate directly, Method A2 shall be used.

10.3.2.3 Strain rate for the determination of the lower yield strength, R_{eL}, and percentage yield point extension, A_e

Following the detection of the upper yield strength (see A.3.2), the estimated strain rate over the parallel length, $\dot{e}_{L_c}$, shall be maintained in one of the following two specified ranges (see Figure 9) until discontinuous yielding has ended.

Range 2: $\dot{e}_{L_c}$ = 0,000 25 s^{-1}, with a relative tolerance of ±20 % (recommended, when R_{eL} is determined).

Range 3: $\dot{e}_{L_c}$ = 0,002 s^{-1}, with a relative tolerance of ±20 %.

© ISO 2019 – All rights reserved

Licensed copy: Brighton University User, University of Brighton, Version correct as of 10/09/2020

10.3.2.4 Strain rate for the determination of the tensile strength, R_m, percentage elongation after fracture, A, percentage total extension at the maximum force, A_{gt}, percentage plastic extension at maximum force, A_g, and percentage reduction area, Z

After determination of the required yield/proof strength properties, the estimated strain rate over the parallel length, $\dot{e}_{L_c}$, shall be changed to one of the following specified ranges (see Figure 9).

Range 2: $\dot{e}_{L_c}$ = 0,000 25 s^{-1}, with a relative tolerance of ±20 %.

Range 3: $\dot{e}_{L_c}$ = 0,002 s^{-1}, with a relative tolerance of ±20 %.

Range 4: $\dot{e}_{L_c}$ = 0,006 7 s^{-1}, with a relative tolerance of ±20 % (0,4 min^{-1}, with a relative tolerance of ±20 %) (recommended, unless otherwise specified).

If the purpose of the tensile test is only to determine the tensile strength, then an estimated strain rate over the parallel length of the test piece according to range 3 or 4 may be applied throughout the entire test.

10.3.3 Testing rate based on stress rate (method B)

10.3.3.1 General

The testing rates shall conform to the following requirements depending on the nature of the material. Unless otherwise specified, any convenient speed of testing may be used up to a stress equivalent to half of the specified yield strength. The testing rates above this point are specified below.

NOTE It is not the intent of Method B to maintain constant stress rate or to control stress rate with closed loop force control while determining yield properties, but only to set the crosshead speed to achieve the target stress rate in the elastic region (see Table 3). When a specimen being tested begins to yield, the stressing rate decreases and can even become negative in the case of a specimen with discontinuous yielding. The attempt to maintain a constant stressing rate through the yielding process requires the testing machine to operate at extremely high speeds and, in most cases, this is neither practical nor desirable.

10.3.3.2 Yield and proof strengths

10.3.3.2.1 Upper yield strength, R_{eH}

The rate of separation of the crossheads of the machine shall be kept as constant as possible and within the limits corresponding to the stress rates in Table 3.

NOTE For information, typical materials having a modulus of elasticity smaller than 150 000 MPa include magnesium, aluminium alloys, brass, and titanium. Typical materials with a modulus of elasticity greater than 150 000 MPa include wrought iron, steel, tungsten, and nickel-based alloys.

Table 3 — Stress rate

Modulus of elasticity of the material E MPa	Stress rate $\dot{R}$ MPa s^{-1}	
	min.	max.
<150 000	2	20
≥150 000	6	60

10.3.3.2.2 Lower yield strength, R_{eL}

If only the lower yield strength is being determined, the strain rate during yield of the parallel length of the test piece shall be between 0,000 25 s^{-1} and 0,002 5 s^{-1}. The strain rate within the parallel

 © ISO 2019 – All rights reserved

Licensed copy: Brighton University User, University of Brighton, Version correct as of 10/09/2020

length shall be kept as constant as possible. If this rate cannot be regulated directly, it shall be fixed by regulating the stress rate just before yield begins, the controls of the machine not being further adjusted until completion of yield.

In no case shall the stress rate in the elastic range exceed the maximum rates given in Table 3.

10.3.3.2.3 Upper and lower yield strengths, R_{eH} and R_{eL}

If both upper and lower yield strengths are determined during the same test, the conditions for determining the lower yield strength shall be complied with (see 10.3.3.2.2).

10.3.3.2.4 Proof strength (plastic extension) and proof strength (total extension), R_p and R_t

The crosshead separation rate of the machine shall be kept as constant as possible and within the limits corresponding to the stress rates in Table 3 for the elastic range. This crosshead separation rate shall be maintained up to the proof strength (plastic extension or total extension). In any case, the strain rate shall not exceed 0,002 5 s^{-1}.

10.3.3.2.5 Rate of separation

If the testing machine is not capable of measuring or controlling the strain rate, a crosshead separation rate equivalent to the stress rate given in Table 3 shall be used until completion of yield.

10.3.3.3 Tensile strength, R_m, percentage elongation after fracture, A, percentage total extension at the maximum force, A_{gt}, percentage plastic extension at maximum force, A_g, and percentage reduction area, Z

After determination of the required yield/proof strength properties, the test rate may be increased to a strain rate (or equivalent crosshead separation rate) no greater than 0,008 s^{-1}.

If only the tensile strength of the material is to be measured, a single strain rate can be used throughout the test which shall not exceed 0,008 s^{-1}.

10.3.4 Report of the chosen testing conditions

In order to report the test control mode and testing rates in an abridged form, the following system of abbreviation can be used:

ISO 6892-1 Annn, or ISO 6892-1 Bn

where “A” defines the use of method A (strain rate based), and “B” the use of method B (stress rate based). The symbols “nnn” are a series of up to 3 characters that refer to the rates used during each phase of the test, as defined in Figure 9, and "n" may be added to indicate the stress rate (in MPa s^{-1}) selected during elastic loading.

EXAMPLE 1 ISO 6892-1:2019 A224 defines a test based on strain rate, using ranges 2, 2 and 4.

EXAMPLE 2 ISO 6892-1:2019 B30 defines a test based on stress rate, performed at a nominal stress rate of 30 MPa s^{-1}.

EXAMPLE 3 ISO 6892-1:2019 B defines a test based on stress rate, performed at a nominal stress rate according to Table 3.

11 Determination of the upper yield strength

R_{eH} may be determined from the force-extension curve or peak load indicator and is defined as the maximum value of stress prior to the first decrease in force. The value is calculated by dividing this force by the original cross-sectional area of the test piece, S_o (see Figure 2).

© ISO 2019 – All rights reserved

Licensed copy: Brighton University User, University of Brighton, Version correct as of 10/09/2020

12 Determination of the lower yield strength

R_{eL} is determined from the force-extension curve and is defined as the lowest value of stress during plastic yielding, ignoring any initial transient effects. The value is calculated by dividing this force by the original cross-sectional area of the test piece, S_o (see Figure 2).

In case of materials having yield phenomena and when A_e is not to be determined: for productivity of testing, R_{eL} may be reported as the lowest stress within the first 0,25 % strain after R_{eH}, not taking into account any initial transient effect. After determining R_{eL} by this procedure, the test rate may be increased as per 10.3.2.4 or 10.3.3.3. Use of this shorter procedure should be recorded on the test report.

13 Determination of proof strength, plastic extension

13.1 R_p is determined from the force-extension curve by drawing a line parallel to the linear portion of the curve and at a distance from it equivalent to the prescribed plastic percentage extension, e.g. 0,2 %. The point at which this line intersects the curve gives the force corresponding to the desired proof strength plastic extension. The latter is obtained by dividing this force by the original cross-sectional area of the test piece, S_o (see Figure 3).

If the straight portion of the force-extension curve is not clearly defined, thereby preventing drawing the parallel line with sufficient precision, the following procedure is recommended (see Figure 6).

When the presumed proof strength has been exceeded, the force is reduced to a value equal to about 10 % of the force obtained. The force is then increased again until it exceeds the value obtained originally. To determine the desired proof strength, a line is drawn through the hysteresis loop. A line is then drawn parallel to this line, at a distance from the corrected origin of the curve, measured along the abscissa, equal to the prescribed plastic percentage extension. The intersection of this parallel line and the force-extension curve gives the force corresponding to the proof strength. The value is calculated by dividing this force by the original cross-sectional area of the test piece, S_o (see Figure 6).

NOTE Several methods can be used to define the corrected origin of the force-extension curve. One of these is to construct a line parallel to that determined by the hysteresis loop so that it is tangential to the force-extension curve. The point where this line crosses the abscissa is the corrected origin of the force-extension curve (see Figure 6).

Care should be taken to ensure that the hysteresis is performed after the final proof strength has passed, but at as low an extension as possible, as performing it at excessive extensions will have an adverse effect on the slope obtained.

If not specified in product standards or agreed by the customer, it is inappropriate to determine proof strength during and after discontinuous yielding.

13.2 The property may be obtained without plotting the force-extension curve by using automatic devices (microprocessor, etc.) (see Annex A).

NOTE Another available method is described in GB/T 228[12].

14 Determination of proof strength, total extension

14.1 R_t is determined on the force-extension curve, taking 10.2 into consideration, by drawing a line parallel to the ordinate axis (force axis) and at a distance from this equivalent to the prescribed total percentage extension. The point at which this line intersects the curve gives the force corresponding to the desired proof strength. The value is calculated by dividing this force by the original cross-sectional area of the test piece, S_o (see Figure 4).

14.2 The property may be obtained without plotting the force-extension curve by using automatic devices (see Annex A).

 © ISO 2019 – All rights reserved

Licensed copy: Brighton University User, University of Brighton, Version correct as of 10/09/2020

15 Method of verification of permanent set strength

The test piece is subjected to a force corresponding to the specified stress for 10 s to 12 s. This force is obtained by multiplying the specified stress by the original cross-sectional area of the test piece, S_o. After removing the force, it is then confirmed that the permanent set extension or elongation is not more than the percentage specified for the original gauge length; see Figure 5.

NOTE This is a pass/fail test, which is not normally performed as a part of the standard tensile test. The stress applied to the test piece and the permissible permanent set extension or elongation are specified either by the product specification or the requester of the test. Example: Reporting "$R_{r0,5}$ = 750 MPa Pass" indicates that a stress of 750 MPa was applied to the test piece and the resulting permanent set was less than or equal to 0,5 %.

16 Determination of the percentage yield point extension

For materials that exhibit discontinuous yielding, A_e is determined from the force-extension curve by subtracting the extension at R_{eH} from the extension at the start of uniform work-hardening. The extension at the start of uniform work-hardening is defined by the intersection of a horizontal line through the last local minimum point, or a regression line through the range of yielding, prior to uniform work-hardening and a line corresponding to the highest slope of the curve occurring at the start of uniform work-hardening (see Figure 7). It is expressed as a percentage of the extensometer gauge length, L_e.

The method used [see Figure 7 a) or b)] should be documented in the test report.

17 Determination of the percentage plastic extension at maximum force

The method consists of determining the extension at maximum force on the force-extension curve obtained with an extensometer and subtracting the elastic strain.

Calculate the percentage plastic extension at maximum force, A_g, from Formula (3):

$$A_g = \left(\frac{\Delta L_m}{L_e} - \frac{R_m}{m_E} \right) \cdot 100 \tag{3}$$

where

ΔL_m is the extension at maximum force;

L_e is the extensometer gauge length;

R_m is the tensile strength;

m_E is the slope of the elastic part of the stress-percentage extension curve.

NOTE For materials which exhibit a plateau at maximum force, the percentage plastic extension at maximum force is the extension at the mid-point of the plateau (see Figure 1).

18 Determination of the percentage total extension at maximum force

The method consists of determining the extension at maximum force on the force-extension curve obtained with an extensometer.

Calculate the percentage total extension at maximum force, A_{gt}, from Formula (4):

$$A_{gt} = \frac{\Delta L_m}{L_e} \cdot 100 \tag{4}$$

© ISO 2019 – All rights reserved

Licensed copy: Brighton University User, University of Brighton, Version correct as of 10/09/2020

where

ΔL_m is the extension at maximum force;

L_e is the extensometer gauge length.

NOTE For materials which exhibit a plateau at maximum force, the percentage total extension at maximum force is the extension at the mid-point of the plateau (see Figure 1).

19 Determination of the percentage total extension at fracture

The method consists of determining the extension at fracture on the force-extension curve obtained with an extensometer.

Calculate the percentage total elongation at fracture, A_t, from Formula (5):

$$A_t = \frac{\Delta L_f}{L_e} \cdot 100 \tag{5}$$

where

ΔL_f is the extension at fracture;

L_e is the extensometer gauge length.

20 Determination of percentage elongation after fracture

20.1 Percentage elongation after fracture shall be determined in accordance with the definition given in 3.4.2.

For this purpose, the broken pieces of the test piece shall be carefully fitted back together so that their axes lie in a straight line.

Special precautions shall be taken to ensure proper contact between the broken parts of the test piece when measuring the final gauge length. This is particularly important for test pieces of small cross-section and test pieces having low elongation values.

Calculate the percentage elongation after fracture, A, from Formula (6):

$$A = \frac{L_u - L_o}{L_o} \cdot 100 \tag{6}$$

where

L_u is the final gauge length after fracture;

L_o is the original gauge length.

Elongation after fracture, $L_u - L_o$, shall be determined to the nearest 0,25 mm or better using a measuring device with sufficient resolution.

If the specified minimum percentage elongation is less than 5 %, it is recommended that special precautions be taken (see Annex H). The result of this determination is valid only if the distance between the fracture and the nearest gauge mark is not less than $L_o/3$. However, the percentage elongation after fracture can be regarded as valid, irrespective of the position of the fracture, if the percentage elongation after fracture is equal to or greater than the specified value. To avoid having to reject test pieces where the distance between the fracture and the next gauge mark is less than $L_o/3$, the method described in Annex I may be used by agreement.

 © ISO 2019 – All rights reserved

Licensed copy: Brighton University User, University of Brighton, Version correct as of 10/09/2020

20.2 When extension at fracture is measured using an extensometer, it is not necessary to mark the gauge lengths. The elongation is measured as the total extension at fracture, and it is therefore necessary to deduct the elastic extension in order to obtain percentage elongation after fracture. To obtain comparable values with the manual method, additional adjustments can be applied (e.g. high enough dynamic and frequency bandwidth of the extensometer) (see A.2.2).

The result of this determination is valid only if fracture and localized extension (necking) occur within the extensometer gauge length, L_e. The percentage elongation after fracture can be regarded as valid regardless of the position of the fracture cross-section if the percentage elongation after fracture is equal to or greater than the specified value. If the product standard specifies the determination of percentage elongation after fracture for a given gauge length, the extensometer gauge length should be equal to this length.

20.3 If elongation is measured over a given fixed length, it can be converted to proportional gauge length, using conversion formulae or tables as agreed before the commencement of testing (e.g. as in ISO 2566-1 and ISO 2566-2).

NOTE Comparisons of percentage elongation are possible only when the gauge length or extensometer gauge length, the shape, and cross-sectional area are the same or when the coefficient of proportionality, k, is the same.

21 Determination of percentage reduction of area

Percentage reduction of area shall be determined in accordance with the definition given in 3.8.

If necessary, the broken pieces of the test piece shall be carefully fitted back together so that their axes lie in a straight line.

For round test pieces, the measurements at the minimum reduced section should be made in 2 planes at 90° to each other and the average used for the calculation of Z.

Care should be taken to ensure that the fracture surfaces are not displaced when making the readings.

Calculate the percentage reduction of area, Z, from Formula (7):

$$Z = \frac{S_o - S_u}{S_o} .100 \tag{7}$$

where

S_o is the original cross-sectional area of the parallel length;

S_u is the minimum cross-sectional area after fracture.

It is recommended to measure S_u to an accuracy of ±2 % (see Figure 13).

Measuring S_u with an accuracy of ±2 % on small diameter round test pieces, or test pieces with other cross-sectional geometries, may not be possible.

22 Test report

The test report shall contain at least the following information, unless otherwise agreed by the parties concerned:

a) reference to this document, extended with the test condition information specified in 10.3.4, e.g. ISO 6892-1:2019 A224;

b) identification of the test piece;

c) specified material, if known;

© ISO 2019 – All rights reserved

Licensed copy: Brighton University User, University of Brighton, Version correct as of 10/09/2020

d) type of test piece;

e) location and direction of sampling of test pieces, if known;

f) testing control mode(s) and testing rate(s) or testing rate range(s) (see 10.3.1) if different from the recommended methods and values given in 10.3.2 and 10.3.3;

g) test results:

— results should be rounded (according to ISO 80000-1) to the following precisions or better, if not otherwise specified in product standards: strength values, in megapascals, to the nearest whole number;

— percentage yield point extension values, A_e, to the nearest 0,1 %;

— all other percentage extension and elongation values to the nearest 0,5 %;

— percentage reduction of area, Z, to the nearest 1 %.

23 Measurement uncertainty

23.1 General

Measurement uncertainty analysis is useful for identifying major sources of inconsistencies of measured results.

Product standards and material property databases based on this document and earlier editions of ISO 6892 have an inherent contribution from measurement uncertainty. It is therefore inappropriate to apply further adjustments for measurement uncertainty and thereby risk failing product which is compliant. For this reason, the estimates of uncertainty derived by following this procedure are for information only.

23.2 Test conditions

The test conditions and limits defined in this document shall not be adjusted to take account of uncertainties of measurement.

23.3 Test results

The estimated measurement uncertainties shall not be combined with measured results to assess conformance to product specifications.

For consideration of uncertainty, see Annexes K and L, which provide guidance for the determination of uncertainty related to metrological parameters and values obtained from the interlaboratory tests on a group of steels and aluminium alloys.

© ISO 2019 – All rights reserved

Licensed copy: Brighton University User, University of Brighton, Version correct as of 10/09/2020

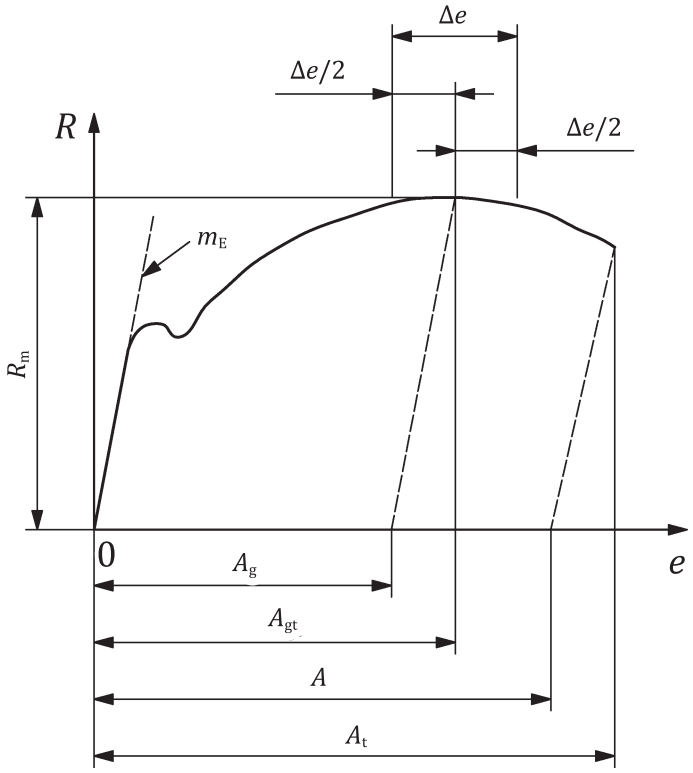

Key

A percentage elongation after fracture [determined from the extensometer signal or directly from the test piece (see 20.1)]

A_g percentage plastic extension at maximum force

A_{gt} percentage total extension at maximum force

A_t percentage total extension at fracture

e percentage extension

m_E slope of the elastic part of the stress-percentage extension curve

R stress

R_m tensile strength

Δe plateau extent (for determination of A_g, see Clause 17, for determination of A_{gt}, see Clause 18)

Figure 1 — Definitions of extension

© ISO 2019 – All rights reserved

Licensed copy: Brighton University User, University of Brighton, Version correct as of 10/09/2020

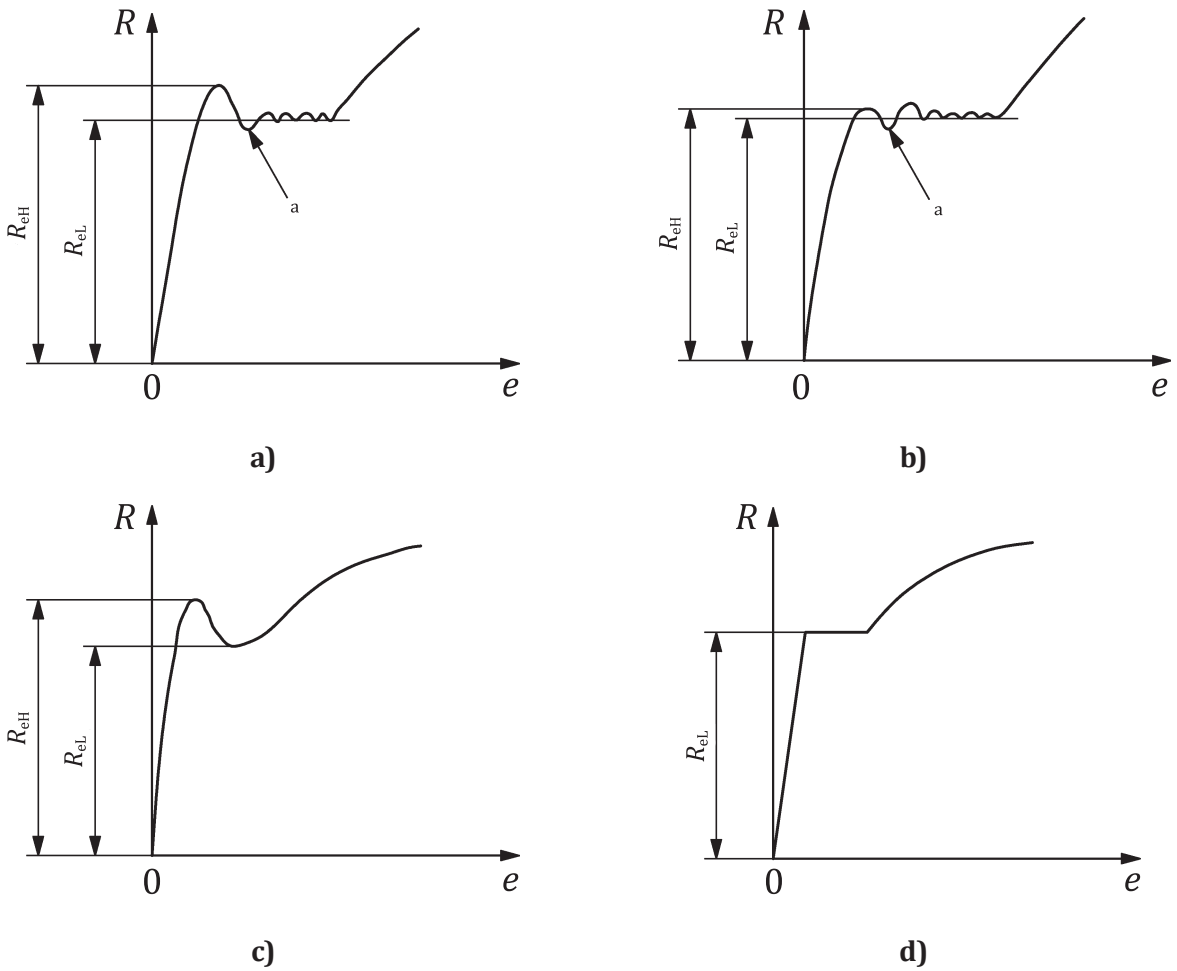

Key

e	percentage extension
R	stress
R_{eH}	upper yield strength
R_{eL}	lower yield strength
a	Initial transient effect.

Figure 2 — Examples of upper and lower yield strengths for different types of curve

© ISO 2019 – All rights reserved

Licensed copy: Brighton University User, University of Brighton, Version correct as of 10/09/2020

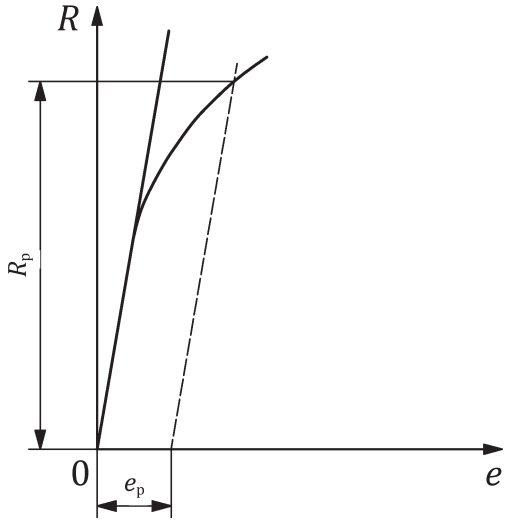

Key

e percentage extension

e_p specified percentage plastic extension

R stress

R_p proof strength, plastic extension

Figure 3 — Proof strength, plastic extension, R_p (see 13.1)

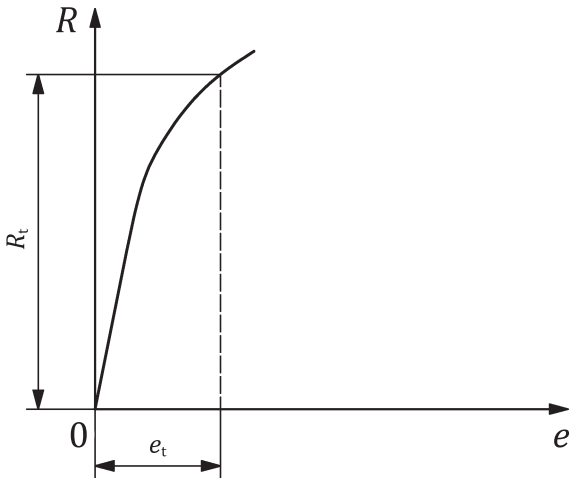

Key

e percentage extension

e_t percentage total extension

R stress

Rt proof strength, total extension

Figure 4 — Proof strength, total extension, R_t

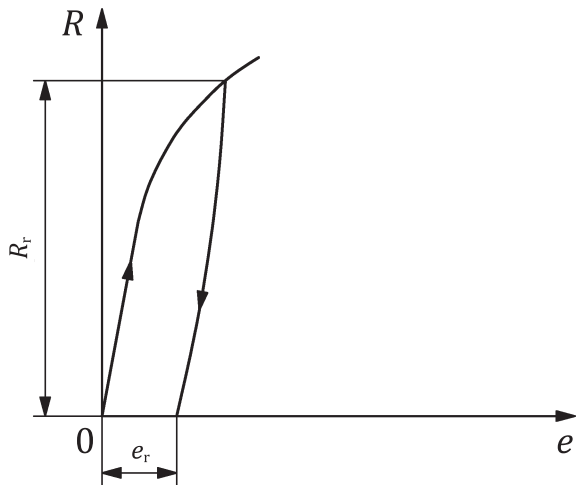

Key

e percentage elongation or percentage extension

e_r percentage permanent set extension or elongation

R stress

R_r specified permanent set strength

Figure 5 — Permanent set strength, R_r

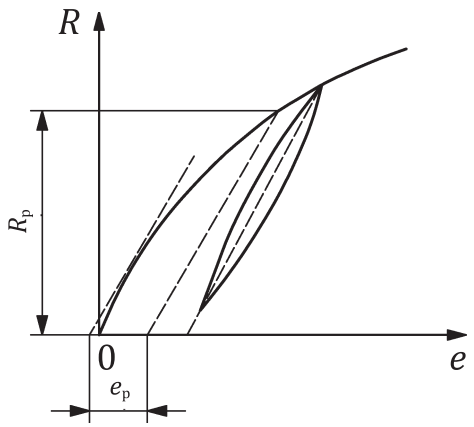

Key

e percentage extension

e_p specified percentage plastic extension

R stress

R_p proof strength, plastic extension

Figure 6 — Proof strength, plastic extension, R_p, alternative procedure (see 13.1)

Licensed copy: Brighton University User, University of Brighton, Version correct as of 10/09/2020

© ISO 2019 – All rights reserved

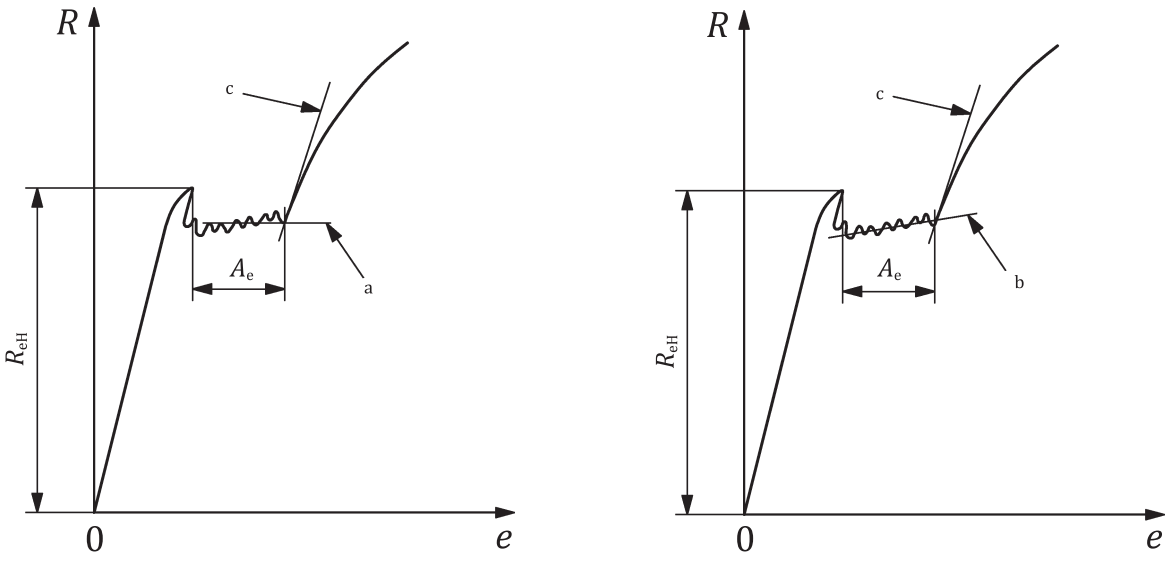

a) Horizontal line method **b) Regression method**

Key

A_e percentage yield point extension

e percentage extension

R stress

R_{eH} upper yield strength

a Horizontal line through the last local minimum point, prior to uniform work-hardening.

b Regression line through the range of yielding, prior to uniform work-hardening.

c Line corresponding to the highest slope of the curve occurring at the start of uniform work-hardening.

Figure 7 — Different evaluation methods for percentage yield point extension, A_e

Licensed copy: Brighton University User, University of Brighton, Version correct as of 10/09/2020

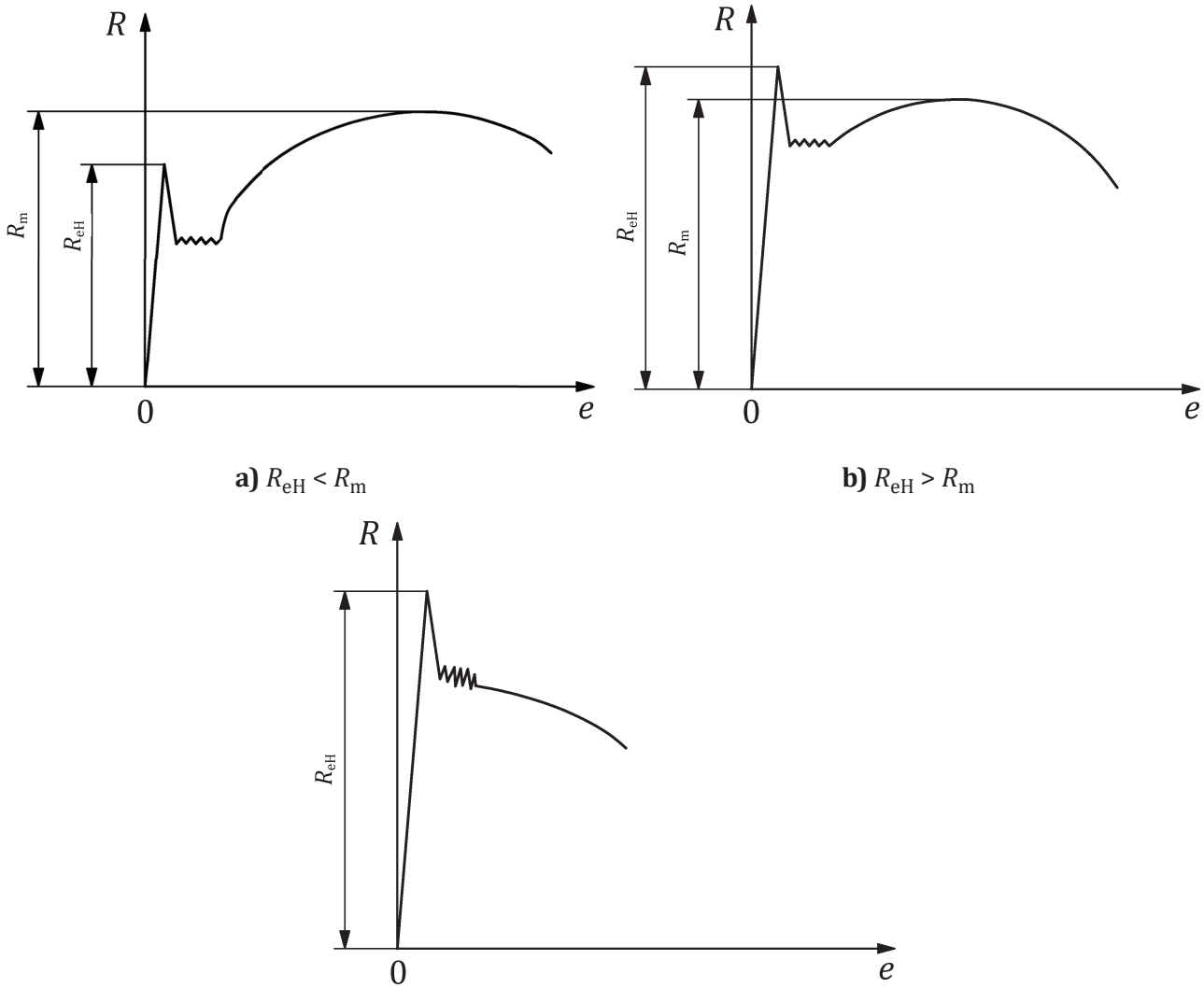

a) $R_{eH} < R_m$

b) $R_{eH} > R_m$

c) Special case of stress-percentage extension behaviour[a]

Key

e percentage extension

R stress

R_{eH} upper yield strength

R_m tensile strength

[a] For materials which display this behaviour, no tensile strength is defined according to this document. If necessary, separate agreements can be made between the parties concerned.

Figure 8 — Different types of stress-extension curve for determination of tensile strength, R_m

Licensed copy: Brighton University User, University of Brighton, Version correct as of 10/09/2020

© ISO 2019 – All rights reserved

Licensed copy: Brighton University User, University of Brighton, Version correct as of 10/09/2020

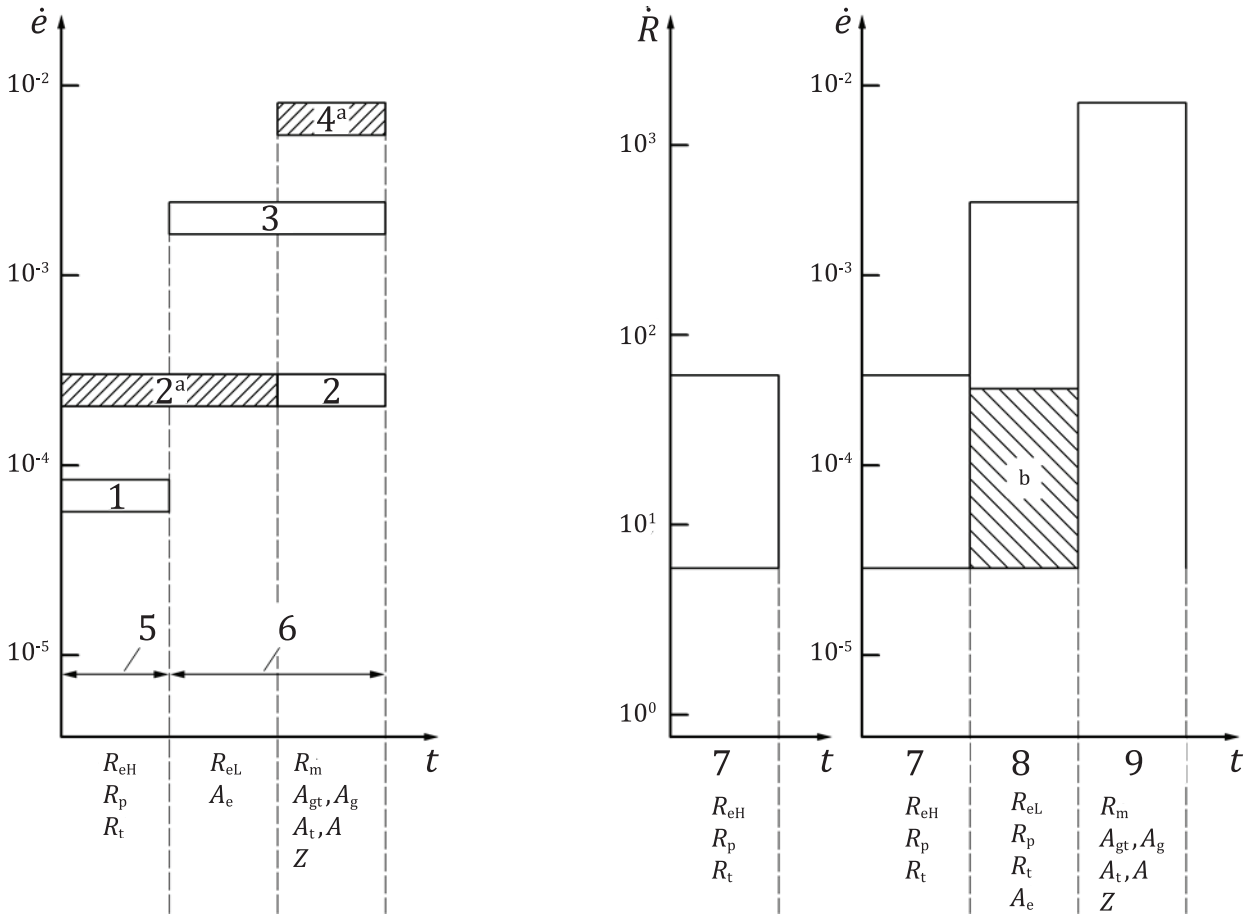

a) Method A **b) Method B**

Key

$\dot{e}$ strain rate, in s^{-1}

$\dot{R}$ stress rate, in MPa s^{-1}

t time

1 range 1: $\dot{e}$ = 0,000 07 s^{-1}, with a relative tolerance of ±20 %

2 range 2: $\dot{e}$ = 0,000 25 s^{-1}, with a relative tolerance of ±20 %

3 range 3: $\dot{e}$ = 0,002 s^{-1}, with a relative tolerance of ±20 %

4 range 4: $\dot{e}$ = 0,006 7 s^{-1}, with a relative tolerance of ±20 % (0,4 min^{-1}, with a relative tolerance of ±20 %)

5 control mode: extensometer control (Method A1 closed loop) or crosshead control (Method A2 open loop)

6 control mode: crosshead control (Method A2 open loop)

7 elastic range of the test

8 plastic range for the determination of R_{eL}, R_p, R_t, A_e

9 maximum strain rate for the determination of R_m, A_{gt}, A_g, A_t, A, Z

a Recommended.

b Expanded range to lower rates, if testing machine is not capable of measuring or controlling the strain rate (see 10.3.3.2.5).

NOTE 1 Symbols refer to Table 1.

NOTE 2 Strain rate in the elastic range for method B is calculated from stress rate using a Young's modulus of 210 000 MPa (steel).

Figure 9 — Illustration of strain rates to be used during the tensile test, if R_{eH}, R_{eL}, R_p, R_t, R_m, A_e, A_g, A_{gt}, A, A_t, and Z are determined

© ISO 2019 – All rights reserved

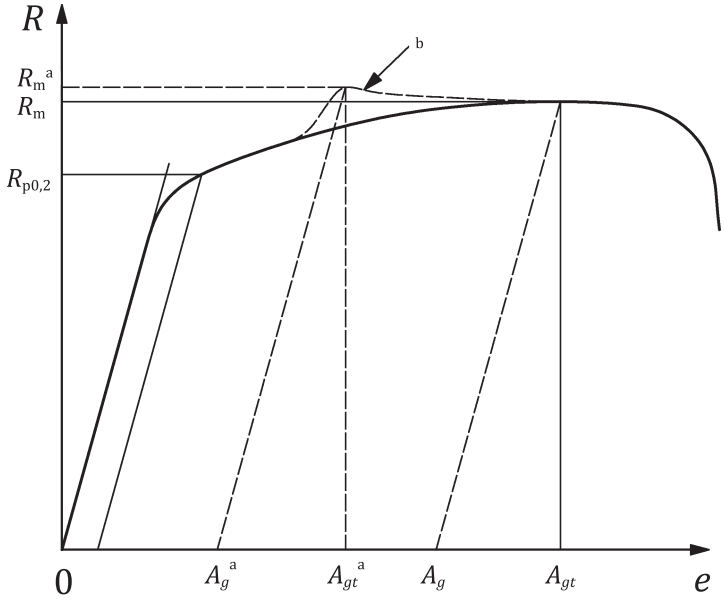

Key

e percentage extension

R stress

a False values, resulting from an abrupt strain rate increase.

b Stress-strain behaviour, if strain rate is abruptly increased.

NOTE For parameter definitions, see Table 1.

Figure 10 — Illustration of an inadmissible discontinuity in the stress-strain curve

Licensed copy: Brighton University User, University of Brighton, Version correct as of 10/09/2020

© ISO 2019 – All rights reserved

Licensed copy: Brighton University User, University of Brighton, Version correct as of 10/09/2020

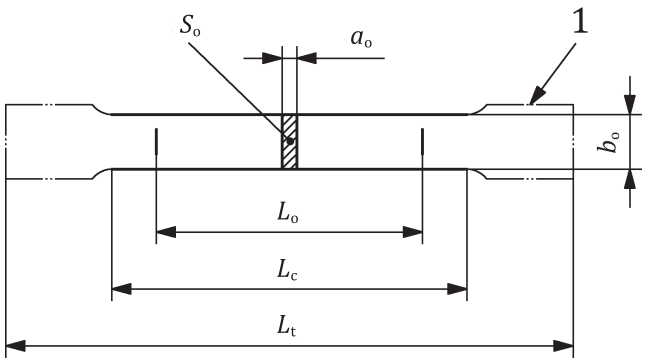

a) Before testing

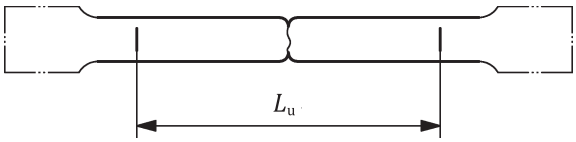

b) After testing

Key

a_o original thickness of a flat test piece or wall thickness of a tube
b_o original width of the parallel length of a flat test piece
L_c parallel length
L_o original gauge length
L_t total length of test piece
L_u final gauge length after fracture
S_o original cross-sectional area of the parallel length
1 gripped ends

NOTE The shape of the test-piece heads is only given as a guide.

Figure 11 — Machined test pieces of rectangular cross-section (see Annexes B and D)

© ISO 2019 – All rights reserved

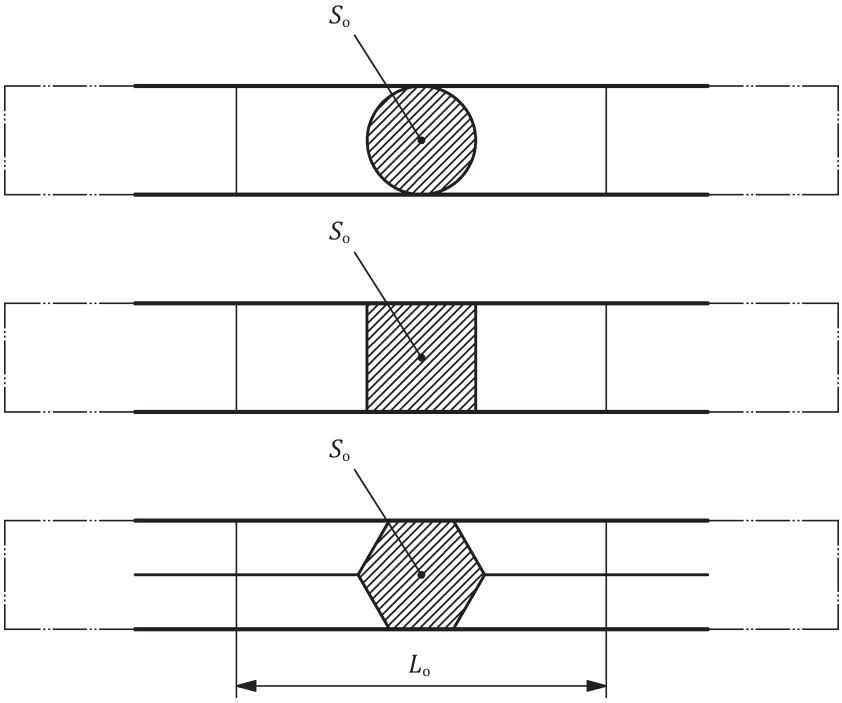

Key

L_o original gauge length

S_o original cross-sectional area

Figure 12 — Test pieces comprising an unmachined portion of the product (see Annex C)

Licensed copy: Brighton University User, University of Brighton, Version correct as of 10/09/2020

© ISO 2019 – All rights reserved

Licensed copy: Brighton University User, University of Brighton, Version correct as of 10/09/2020

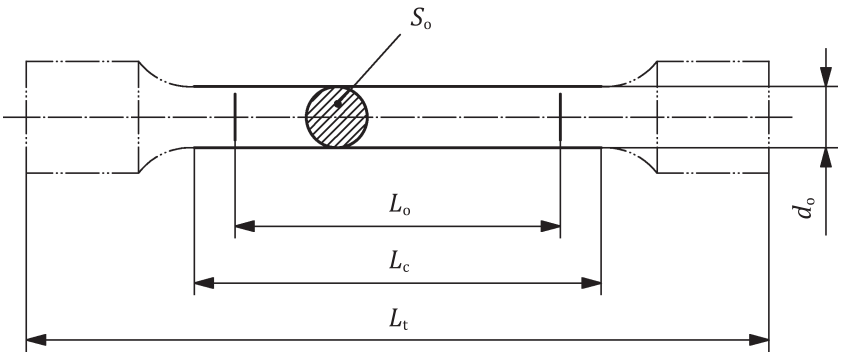

a) Before testing

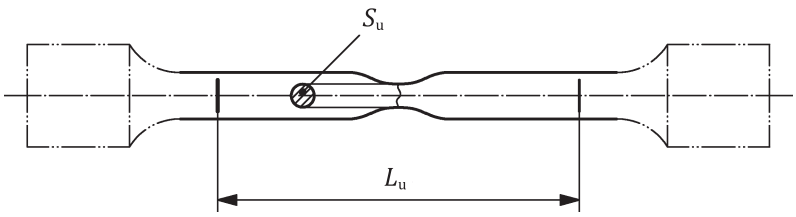

b) After testing

Key

d_o original diameter of the parallel length of a circular test piece
L_c parallel length
L_o original gauge length
L_t total length of test piece
L_u final gauge length after fracture
S_o original cross-sectional area of the parallel length
S_u minimum cross-sectional area after fracture

NOTE The shape of the test-piece heads is only given as a guide.

Figure 13 — Machined test pieces of round cross-section (see Annex D)

© ISO 2019 – All rights reserved

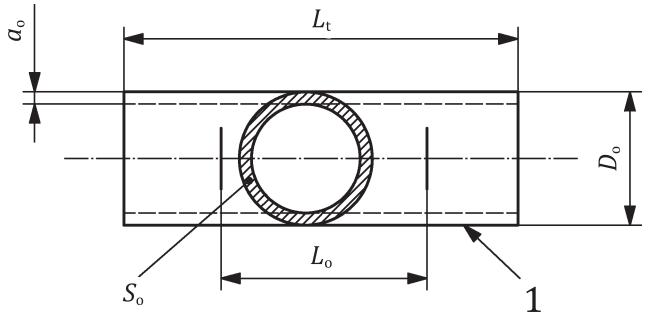

a) Before testing

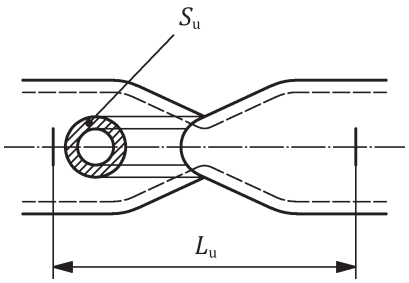

b) After testing

Key

a_o original wall thickness of a tube
D_o original external diameter of a tube
L_o original gauge length
L_t total length of test piece
L_u final gauge length after fracture
S_o original cross-sectional area of the parallel length
S_u minimum cross-sectional area after fracture
1 gripped ends

Figure 14 — Test pieces comprising a length of tube (see Annex E)

Licensed copy: Brighton University User, University of Brighton, Version correct as of 10/09/2020

© ISO 2019 – All rights reserved

Licensed copy: Brighton University User, University of Brighton, Version correct as of 10/09/2020

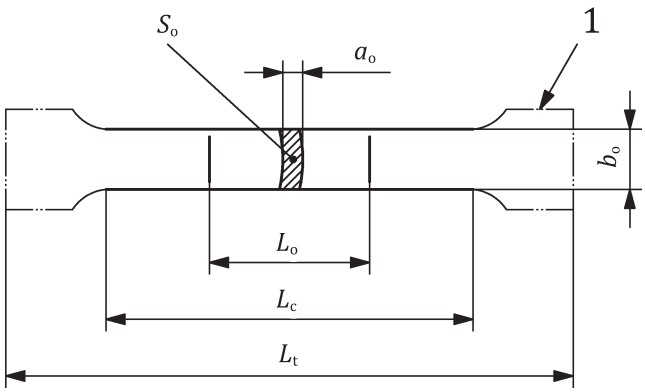

a) Before testing

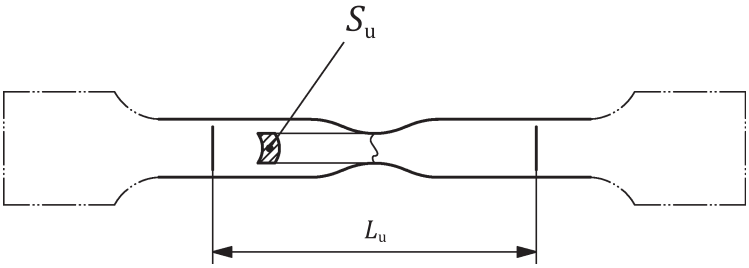

b) After testing

Key

a_o original wall thickness of a tube
b_o original average width of the longitudinal strip taken from a tube
L_c parallel length
L_o original gauge length
L_t total length of test piece
L_u final gauge length after fracture
S_o original cross-sectional area of the parallel length
S_u minimum cross-sectional area after fracture
1 gripped ends

NOTE The shape of the test-piece heads is only given as a guide.

Figure 15 — Test piece cut from a tube (see Annex E)

© ISO 2019 – All rights reserved

Licensed copy: Brighton University User, University of Brighton, Version correct as of 10/09/2020

Annex A
(informative)

Recommendations concerning the use of computer-controlled tensile testing machines

A.1 General

This annex contains additional recommendations for the determination of mechanical properties by using a computer-controlled tensile testing machine. In particular, it provides the recommendations that should be taken into account in the software and testing conditions.

These recommendations are related to the design, the software of the machine and its validation, and to the operating conditions of the tensile test.

A.2 Tensile testing machine

A.2.1 Design

The machine should be designed in order to provide outputs giving analogue signals untreated by the software. If such outputs are not provided, the machine manufacturer should give raw digital data with information on how these raw digital data have been obtained and treated by the software. They should be given in basic SI units relating to the force, the extension, the crosshead separation, the time, and the test piece dimensions. An example of the format of suitable data files is given in Figure A.1.

© ISO 2019 – All rights reserved

Licensed copy: Brighton University User, University of Brighton, Version correct as of 10/09/2020

A

```
"Reference";"ISO 6892"
"Identification";"TENSTAND"
"Material";"DC 04 Steel"
"Extensometer to crosshead transition";0.00;"%"
"Specimen geometry";"flat"
"Specimen thickness = ao"
"Specimen width = bo"
"Cross-sectional area = So"
"Extensometer gauge length = Le"
"Extensometer output in mm"
"Parallel length = Lc"
"Data acquisition rate 50Hz"
"Data row for start force reduction (Hysteresis) = Hs"
"Data row for end force reduction (Hysteresis) = He"
"Data row for swtich to crosshead = Cs"
"File length N data rows"
"File width M data columns"
.
.
```

B

```
"ao";0.711;"mm"
"bo";19.93;"mm"
"So";14.17;"mm2"
"Le";80.00;"mm"
"Lc";120.00;"mm"
"N";2912
"M";4
"Hs";0
"He";0
"Cs";0
.
.
```

C

```
"time";"crosshead";"extensometer";"force"
"s";"mm";"mm";"kN"
.
.
0.40;0.0012;0.0000;0.12694
0.42;0.0016;0.0000;0.12992
0.44;0.0020;0.0001;0.13334
0.46;0.0024;0.0002;0.13699
0.48;0.0029;0.0003;0.14114
0.50;0.0035;0.0004;0.14620
0.52;0.0041;0.0006;0.15124
0.54;0.0047;0.0007;0.15669
0.56;0.0054;0.0008;0.16247
0.58;0.0060;0.0009;0.16794
0.60;0.0067;0.0012;0.17370
0.62;0.0074;0.0013;0.17980
0.64;0.0082;0.0014;0.18628
.
.
```

Key

A header

B test parameters and sample dimensions

C data

Figure A.1 — Example of the format of suitable data files

A.2.2 Data sampling frequency

The frequency bandwidth of each of the measurement channels and the data sampling frequency should be sufficiently high to record the material characteristics to be measured. For example, to capture R_{eH}, Formula (A.1) may be used to determine the minimum sampling frequency, f_{min}, in reciprocal seconds:

$$f_{min} = \frac{\dot{e} \cdot E}{R_{eH} \cdot q} \cdot 100 \qquad \text{(A.1)}$$

© ISO 2019 – All rights reserved

Licensed copy: Brighton University User, University of Brighton, Version correct as of 10/09/2020

where

$\dot{e}$ is the strain rate, in reciprocal seconds;

E is the modulus of elasticity, in megapascals;

R_{eH} is the upper yield strength, in megapascals;

q is the relative force measurement accuracy error, expressed as a percentage, of the testing machine (according to ISO 7500-1).

The choice of R_{eH} in Formula (A.1) is due to the fact that it corresponds to a transient characteristic during the test. If the material tested has no yield phenomena, the proof strength $R_{p0,2}$ should be used and the required minimum sampling frequency can be halved.

If method B (stress rate based) is used, the minimum sampling frequency should be calculated using Formula (A.2):

$$f_{min} = \frac{\dot{R}}{R_{eH} \cdot q} \cdot 100 \qquad \text{(A.2)}$$

where $\dot{R}$ is the stress rate, in megapascals per second.

A.3 Determination of the mechanical properties

A.3.1 General

The following requirements should be taken into account by the software of the machine.

A.3.2 Upper yield strength

R_{eH} (3.10.2.1) should be considered as the stress corresponding to the highest value of the force prior to a reduction of at least 0,5 % of the force, and followed by a region in which the force should not exceed the previous maximum over a strain range not less than 0,05 %.

A.3.3 Proof strength at plastic extension and proof strength at total extension

R_p (3.10.3) and R_t (3.10.4) can be determined by interpolation between adjacent points on the curve.

A.3.4 Percentage total extension at maximum force

A_{gt} (see 3.6.4 and Figure 1) should be considered as the total extension corresponding to the strain at maximum force.

For some materials, it is necessary to smooth the stress-strain curve in which case a polynomial regression is recommended. The smoothing range may have an influence on the result. The smoothed curve should be a reasonable representation of the relevant part of the original stress-strain curve.

A.3.5 Percentage plastic extension at maximum force

A_g (see 3.6.5 and Figure 1) should be considered as the plastic extension corresponding to the strain at maximum force.

For some materials, it is necessary to smooth the stress-strain curve in which case a polynomial regression is recommended. The smoothing range may have an influence on the result. The smoothed curve should be a reasonable representation of the relevant part of the original stress-strain curve.

 © ISO 2019 – All rights reserved

Licensed copy: Brighton University User, University of Brighton, Version correct as of 10/09/2020

A.3.6 Percentage elongation at fracture

A.3.6.1 Determine A_t with reference to the definition of fracture in Figure A.2.

The fracture is considered to be effective when the force between two consecutive points decreases

a) by more than five times the difference between the value of the previous two points, followed by a decrease to lower than 2 % of the maximum tensile force, and

b) lower than 2 % of the maximum tensile force (soft materials).

An increased sampling rate and/or filtering of the force signal may influence the point of fracture determined according to this method.

Another useful method for detecting the fracture of the test piece is to monitor the voltage or electric current through the test piece, when the values measured just before the current is interrupted are taken as those at fracture.

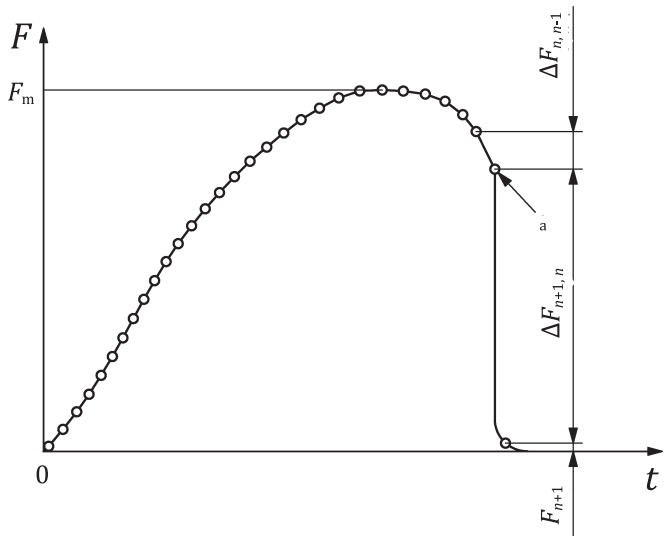

Key

F	force	a	Fracture.
F_m	maximum force	○	data point
F_{n+1}	force at measuring point $n + 1$		Criteria for fracture
$\Delta F_{n,n-1}$	force difference between measuring point n and $n - 1$		$\lvert\Delta F_{n+1,n}\rvert > 5\lvert\Delta F_{n,n-1}\rvert$ and/or $F_{n+1} < 0{,}02F_m$
$\Delta F_{n+1,n}$	force difference between measuring point $n + 1$ and n		
t	time		

Figure A.2 — Schematic representation for definition of fracture of the test piece

A.3.6.2 If the extensometer is kept on and the extension is measured until the fracture, evaluate the value at point 1 in Figure A.2

A.3.6.3 If the extensometer is removed or if the extension measurement is interrupted before fracture but after maximum force, F_m, then it is permitted to use crosshead displacement to determine the additional elongation between removal of the extensometer and fracture. The method used should be verifiable.

© ISO 2019 – All rights reserved

Licensed copy: Brighton University User, University of Brighton, Version correct as of 10/09/2020

A.3.7 Measurement of the slope of the curve in the elastic range

In order to be valid for test pieces of unknown characteristics, the method used should not rely upon any predefined stress limit, unless this is defined in the product standard or by agreement between parties to the test.

Methods based on the calculation of the characteristics of a sliding segment are the most convenient. The parameters are the following:

a) the length of the sliding segment (number of points used);

b) the formula chosen as reference to define the slope of the curve.

NOTE If the straight portion of the force extension curve is not clearly defined, refer to 13.1.

The slope of the curve in the elastic range corresponds to the mean slope in a range where the following conditions are fulfilled:

— the slope of the sliding segment is constant;

— the selected range is representative.

In any case, it is recommended that pertinent limits for the range can be selected by the user in order to eliminate unrepresentative values of the slope of the curve in the elastic range.

References to these and other acceptable methods are given in References [5], [17], [18], and [19].

A recommended method to determine the slope of the elastic line for evaluation of $R_{p0,2}$ (Reference [20]) is given below.

— linear regression of the linear range;

— lower limit: ~10 % of $R_{p0,2}$;

— upper limit: ~40 % of $R_{p0,2}$;

— to get more exact data for $R_{p0,2}$, the elastic line should be checked and if necessary recalculated with other limits.

A.4 Validation of the software for determination of the tensile properties

The efficiency of the methods used by the testing system to determine the various material characteristics may be checked by comparison with results determined in the traditional manner by examination/calculation from plots of analogue or digital data. Data which are derived directly from the machine transducers or amplifiers should be collected and processed using equipment with frequency bandwidth, sampling frequency, and uncertainty of at least equal to those used to provide the machine computer-calculated results.

Confidence may be placed in the accuracy of the machine computer processing if differences in arithmetic means between computer-determined values and those determined manually on the same test piece are small. For the purposes of assessing the acceptability of such differences, five similar test pieces should be tested and the average difference for each relevant property should lie within the limits shown in Table A.1.

NOTE This procedure confirms only that the machine finds the material characteristics for the particular test piece shape, material tested, and conditions used. It gives no confidence that the properties of the material tested are either correct or fit for purpose.

If other methods are used, e.g. injection of a pre-determined set of data from a known material with a recognized level of quality assurance, these should meet the criteria mentioned above and those in Table A.1.

 © ISO 2019 – All rights reserved

Licensed copy: Brighton University User, University of Brighton, Version correct as of 10/09/2020

As part of the EU-funded TENSTAND project (GBRD-CT-2000-00412), ASCII data files were produced with agreed values of tensile properties that may be used for validation of software. Further details are given in References [21] and [22].

Table A.1 — Maximum permitted differences between computer-derived and manually derived results

Parameter	D[a]		s[b]	
	Relative[c]	Absolute[c]	Relative[c]	Absolute[c]
$R_{p0,2}$	≤0,5 %	2 MPa	≤0,35 %	2 MPa
R_{p1}	≤0,5 %	2 MPa	≤0,35 %	2 MPa
R_{eH}	≤1 %	4 MPa	≤0,35 %	2 MPa
R_{eL}	≤0,5 %	2 MPa	≤0,35 %	2 MPa
R_m	≤0,5 %	2 MPa	≤0,35 %	2 MPa
A	—	≤2 %	—	≤2 %

a $D = \frac{1}{n}\sum_{i=1}^{n} D_i$.

b $s = \sqrt{\frac{1}{n-1}\sum_{i=1}^{n}(D_i - D)^2}$.

where

D_i is the difference between the result of manual evaluation, H_i, and the result of computer evaluation, R_i, for a test piece ($D_i = H_i - R_i$);

n is the number of identical test pieces from one sample (≥5);

c The highest of the relative and absolute values should be taken into account.

A.5 Computer compatible representation of standards

Computer Compatible Representation of Standards Computer readable data formats developed within the scope of the CEN/WS ELSSI-EMD offer an effective means to overcome systems interoperability issues and enable electronic reporting in the engineering materials sector. The findings of CEN/WS ELSSI-EMD, which aimed to establish the viability of defining data formats based on documentary Standards for mechanical testing, are reported in CWA 16200[42]. The guidelines that CWA 16200 describes for defining computer readable data formats based on a documentary testing standard have been applied to ISO 6892-1. The resulting definitions are available from the BSI Standards Resources server.

To demonstrate potential usage, CWA 16200 includes examples of the reporting capability for the data formats based on a tensile test carried out using a test piece manufactured from the Tensile Certified Reference Material CRM 661 (INGELBRECHT and LOVEDAY 2000[29]) carried out as part of the TENSTAND Project (RIDES and LORD, 2005[21]).

© ISO 2019 – All rights reserved

Licensed copy: Brighton University User, University of Brighton, Version correct as of 10/09/2020

Annex B
(normative)

Types of test pieces to be used for thin products: sheets, strips, and flats between 0,1 mm and 3 mm thick

B.1 General

For products of less than 0,5 mm thickness, special precautions can be necessary.

B.2 Shape of the test piece

Generally, the test piece has gripped ends which are wider than the parallel length. The parallel length, L_c, shall be connected to the ends by means of transition curves with a radius of at least 20 mm. The width of these ends should be ≥1,2b_o, where b_o is the original width.

By agreement, the test piece may also consist of a strip with parallel sides (parallel sided test piece). For products of width equal to or less than 20 mm, the width of the test piece may be the same as that of the product.

B.3 Dimensions of the test piece

Three different non-proportional test piece geometries are widely used (see Table B.1).

The parallel length shall not be less than $L_o + b_o/2$.

In case of dispute, the length $L_o + 2b_o$ should be used, unless there is insufficient material.

For parallel side test pieces less than 20 mm wide, and unless otherwise specified in the product standard, the original gauge length, L_o, shall be equal to 50 mm. For this type of test piece, the free length between the grips shall be equal to $L_o + 3b_o$.

When measuring the dimensions of each test piece, the tolerances on shape given in Table B.2 shall apply.

For test pieces where the width is the same as that of the product, the original cross-sectional area, S_o, shall be calculated on the basis of the measured dimensions of the test piece.

The nominal width of the test piece may be used, provided that the machining tolerances and tolerances on shape given in Table B.2 have been complied with, to avoid measuring the width of the test piece before the test.

© ISO 2019 – All rights reserved

Licensed copy: Brighton University User, University of Brighton, Version correct as of 10/09/2020

Table B.1 — Dimensions of test pieces

Dimensions in millimetres

Test piece type	Width b_o	Original gauge length L_o	Parallel length L_c		Free length between the grips for parallel sided test piece
			Minimum	Recommended	
1	12,5 ± 1	50	57	75	87,5
2	20 ± 1	80	90	120	140
3	25 ± 1	50[a]	60[a]	—	Not defined

[a] The ratio L_o/b_o and L_c/b_o of a type 3 test piece in comparison to one of types 1 and 2 is very low. As a result, the properties, especially the elongation after fracture (absolute value and scatter range), measured with this test piece, will be different from the other test piece types.

Table B.2 — Tolerances on the width of the test piece

Dimensions and tolerances in millimetres

Nominal width of the test piece	Machining tolerance[a]	Tolerance on shape[b]
12,5	±0,05	0,06
20	±0,10	0,12
25	±0,10	0,12

[a] These tolerances are applicable if the nominal width of the test piece is to be used in the calculation of the original cross-sectional area, S_o, without having to measure the width of each test piece.

[b] Maximum deviation between the measurements of the width along the entire parallel length, L_c, of the test piece.

B.4 Preparation of test pieces

The test pieces shall be prepared so as not to affect the properties of the sample. Any areas which have been hardened by shearing or punching, if it affects the properties, shall be removed by machining. These test pieces are predominantly prepared from sheet or strip. If possible, the as-rolled surfaces should not be removed.

The preparation of these test pieces by punching can result in significant changes to the material properties, especially the yield/proof strength (due to work-hardening). Materials which exhibit high work-hardening should, generally, be prepared by milling, grinding, etc.

For very thin materials, it is recommended that strips of identical widths should be cut and assembled into a bundle with intermediate layers of a paper which is resistant to the cutting oil. Each small bundle of strips should then be assembled with a thicker strip on each side, before machining to the final dimensions of the test piece.

The tolerance given in Table B.2, e.g. ±0,05 mm for a nominal width of 12,5 mm, means that no test piece shall have a width outside the two values given below, if the nominal value of the original cross-sectional area, S_o, is to be included in the calculation without having to measure it.

— 12,5 mm + 0,05 mm = 12,55 mm

— 12,5 mm – 0,05 mm = 12,45 mm

© ISO 2019 – All rights reserved

B.5 Determination of the original cross-sectional area

S_o shall be calculated from measurements of the dimensions of the test piece or by assumption of good machining practice (see footnote a of Table B.2).

The error in determining the original cross-sectional area shall not exceed ±2 %. As the greatest part of this error normally results from the measurement of the thickness of the test piece, the error in measurement of the width shall not exceed ±0,2 %.

In order to achieve test results with a reduced measurement uncertainty, it is recommended that the original cross-sectional area be determined with an accuracy of ±1 % or better. For thin materials, special measurement techniques can be required.

Licensed copy: Brighton University User, University of Brighton, Version correct as of 10/09/2020

© ISO 2019 – All rights reserved

Licensed copy: Brighton University User, University of Brighton, Version correct as of 10/09/2020

Annex C
(normative)

Types of test pieces to be used for wire, bars, and sections with a diameter or thickness of less than 4 mm

C.1 Shape of the test piece

The test piece generally consists of an unmachined portion of the product (see Figure 12).

C.2 Dimensions of the test piece

The original gauge length, L_o, shall be taken as 200 mm ± 2 mm or 100 mm ± 1 mm. The distance between the grips of the machine shall be equal to at least $L_o + 3b_o$ but a minimum of L_o + 20 mm.

If the percentage elongation after fracture is not to be determined, a distance between the grips of at least 50 mm may be used.

C.3 Preparation of test pieces

If the product is delivered coiled, care shall be taken in straightening it.

C.4 Determination of the original cross-sectional area

Determine S_o to an accuracy of ±1 % or better.

For products of circular cross-section, the original cross-sectional area may be calculated from the arithmetic mean of two measurements carried out in two perpendicular directions.

The original cross-sectional area, S_o, in square millimetres, may be determined from the mass of a known length and its density using Formula (C.1):

$$S_o = \frac{1\,000 \cdot m}{\rho \cdot L_t} \tag{C.1}$$

where

m is the mass, in grams, of the test piece;

ρ is the density, in grams per cubic centimetre, of the test piece material;

L_t is the total length, in millimetres, of the test piece.

© ISO 2019 – All rights reserved

Licensed copy: Brighton University User, University of Brighton, Version correct as of 10/09/2020

Annex D
(normative)

Types of test pieces to be used for sheets and flats of thickness equal to or greater than 3 mm and wire, bars, and sections of diameter or thickness equal to or greater than 4 mm

D.1 Shape of the test piece

Usually, the test piece is machined and the parallel length shall be connected by means of transition radii to the gripped ends which may be of any suitable shape for the grips of the testing machine (see Figure 13). The minimum transition radius between the gripped ends and the parallel length shall be the following:

a) $0{,}75d_o$, where d_o is the diameter of the parallel length, for the cylindrical test pieces;

b) 12 mm for other test pieces.

Sections, bars, etc. may be tested unmachined, if required.

The cross-section of the test piece may be circular, square, rectangular or, in special cases, of another shape.

For test pieces with a rectangular cross-section, the width to thickness ratio should not exceed 8:1.

In general, the diameter of the parallel length of machined cylindrical test pieces shall be not less than 3 mm.

D.2 Dimensions of the test piece

D.2.1 Parallel length of machined test piece

The parallel length, L_c, shall be at least equal to:

a) $L_o + (d_o/2)$ for cylindrical test pieces;

b) $L_o + 1{,}5\sqrt{S_o}$ for proportional test pieces other than cylindrical test pieces;

c) $L_o + (b_o/2)$ for non-proportional test pieces (see Table D.2).

In case of dispute, the length $L_o + 2d_o$ or $L_o + 2\sqrt{S_o}$ shall be used depending on the type of test piece, unless there is insufficient material.

D.2.2 Length of unmachined test piece

The free length between the grips of the machine shall be adequate for the gauge marks to be at least a distance of $\sqrt{S_o}$ from the grips.

© ISO 2019 – All rights reserved

Licensed copy: Brighton University User, University of Brighton, Version correct as of 10/09/2020

D.2.3 Original gauge length

D.2.3.1 Proportional test pieces

As a general rule, proportional test pieces are used where L_o is related to the original cross-sectional area, S_o, by Formula (D.1):

$$L_o = k\sqrt{S_o} \tag{D.1}$$

where k is equal to 5,65.

Alternatively, 11,3 may be used as the k value.

Test pieces of circular cross-section should preferably have one set of dimensions given in Table D.1.

Table D.1 — Circular cross-section test pieces

Coefficient of proportionality k	Diameter d mm	Original gauge length $L_o = k\sqrt{S_o}$ mm	Minimum parallel length L_c mm
5,65	20	100	110
	14	70	77
	10	50	55
	5	25	28

D.2.3.2 Non-proportional test pieces

Non-proportional test pieces may be used if specified by the product standard.

The parallel length, L_c, should not be less than $L_o + b_o/2$. In case of dispute, the parallel length $L_c = L_o + 2b_o$ shall be used unless there is insufficient material.

Table D.2 gives details of some typical test piece dimensions.

Table D.2 — Typical flat test piece dimensions

Dimensions in millimetres

Width b_o	Original gauge length L_o	Minimum parallel length L_c	Approximately total length L_t
40 ± 0,7	200	220	450
25 ± 0,7	200	212,5	450
20 ± 0,5	80	90	300

D.3 Preparation of test pieces

D.3.1 General

The tolerances on the transverse dimensions of machined test pieces are given in Table D.3.

An example of the application of these tolerances is given in D.3.2 and D.3.3.

© ISO 2019 – All rights reserved

Licensed copy: Brighton University User, University of Brighton, Version correct as of 10/09/2020

D.3.2 Machining tolerances

The value given in Table D.3, e.g. ±0,03 mm for a nominal diameter of 10 mm, means that no test piece shall have a diameter outside the two values given below, if the nominal value of the original cross-sectional area, S_o, is to be used in the calculation of results without having to measure each test piece.

— 10 mm + 0,03 mm = 10,03 mm

— 10 mm – 0,03 mm = 9,97 mm

D.3.3 Tolerances on shape

The value given in Table D.3 means that, for a test piece with a nominal diameter of 10 mm which satisfies the machining conditions given above, the deviation between the smallest and largest diameters measured shall not exceed 0,04 mm.

Consequently, if the minimum diameter of this test piece is 9,99 mm, its maximum diameter shall not exceed 9,99 mm + 0,04 mm = 10,03 mm.

Table D.3 — Tolerances relating to the transverse dimensions of test pieces

Dimensions and tolerances in millimetres

Designation	Nominal transverse dimension	Machining tolerance on the nominal dimension[a]	Tolerance on shape[b]
Diameter of machined test pieces of circular cross-section and transverse dimensions of test pieces of rectangular cross-section machined on all four sides	≥3 ≤6	±0,02	0,03
	>6 ≤10	±0,03	0,04
	>10 ≤18	±0,05	0,04
	>18 ≤30	±0,10	0,05
Transverse dimensions of test pieces of rectangular cross-section machined on only two opposite sides	≥3 ≤6	±0,02	0,03
	>6 ≤10	±0,03	0,04
	>10 ≤18	±0,05	0,06
	>18 ≤30	±0,10	0,12
	>30 ≤50	±0,15	0,15

[a] These tolerances are applicable if the nominal transverse dimensions of machined test piece are to be used in the calculation of the original cross-sectional area, S_o, without having to measure the transverse dimensions of each test piece. If these machining tolerances are not complied with, it is essential to measure every individual test piece.

[b] Maximum deviation between the measurements of a specified transverse dimension along the entire parallel length, L_c, of the test piece.

© ISO 2019 – All rights reserved

Licensed copy: Brighton University User, University of Brighton, Version correct as of 10/09/2020

D.4 Determination of the cross-sectional area

The nominal dimensions can be used to calculate S_o for test pieces of circular cross-section and rectangular cross-section machined on all four sides that satisfy the tolerances given in Table D.3. For all other shapes of test pieces, the original cross-sectional area shall be calculated from measurements of the appropriate dimensions, with an error not exceeding ±0,5 % on each dimension.

© ISO 2019 – All rights reserved

Licensed copy: Brighton University User, University of Brighton, Version correct as of 10/09/2020

Annex E
(normative)

Types of test pieces to be used for tubes

E.1 Shape of the test piece

The test piece consists either of a length of tube, or a longitudinal or transverse strip cut from the tube and having the full thickness of the wall tube (see Figures 14 and 15), or of a test piece of circular cross-section machined from the wall of the tube.

Machined transverse, longitudinal, and circular cross-section test pieces are described in Annex B for tube wall thickness less than 3 mm, and in Annex D for thickness equal to or greater than 3 mm. The longitudinal strip is generally used for tubes with a wall thickness of more than 0,5 mm.

E.2 Dimensions of the test piece

E.2.1 Length of tube

The tube length may be plugged at both ends. The free length between each plug and the nearest gauge marks shall be greater than $D_o/4$. In case of dispute, the value, D_o, shall be used, if there is sufficient material.

The length of the plug projecting beyond the grips of the machine in the direction of the gauge marks shall not exceed D_o, and its shape shall be such that it does not interfere with deformation of the gauge length.

E.2.2 Longitudinal or transverse strip

The parallel length, L_c, of the longitudinal strips shall not be flattened but the heads may be flattened for gripping in the testing machine.

Transverse or longitudinal test piece dimensions other than those given in Annexes B and D can be specified in the product standard.

Special precautions shall be taken when straightening the transverse test pieces.

E.2.3 Circular cross-section test piece machined in tube wall

The sampling of the test pieces is specified in the product standard.

E.3 Determination of the original cross-sectional area

S_o for the test piece shall be determined to the nearest ±1 % or better.

The original cross-sectional area, S_o, in square millimetres, of the length of tube or longitudinal or transverse strip may be determined from the mass of the test piece, the length of which has been measured, and from its density using Formula (E.1):

$$S_o = \frac{1\,000\,m}{\rho\,L_t} \tag{E.1}$$

© ISO 2019 – All rights reserved

Licensed copy: Brighton University User, University of Brighton, Version correct as of 10/09/2020

where

m is the mass, in grams, of the test piece;

ρ is the density, in grams per cubic centimetre, of the test piece material;

L_t is the total length, in millimetres, of the test piece.

The original cross-sectional area, S_o, of a test piece consisting of a longitudinal sample shall be calculated according to Formula (E.2):

$$S_o = \frac{b_o}{4}(D_o^2 - b_o^2)^{1/2} + \frac{D_o^2}{4}\arcsin\left(\frac{b_o}{D_o}\right) - \frac{b_o}{4}\left[(D_o - 2a_o)^2 - b_o^2\right]^{1/2} - \left(\frac{D_o - 2a_o}{2}\right)^2 \arcsin\left(\frac{b_o}{D_o - 2a_o}\right) \quad \text{(E.2)}$$

where

b_o is the average width of the strip;

D_o is the external diameter of the tube;

a_o is the thickness of the tube wall.

The simplified Formula (E.3) can be used for longitudinal test pieces where the ratio between width and external tube diameter falls below set limits:

$$\left.\begin{aligned} S_o &= a_o b_o \left[1 + \frac{b_o^2}{6D_o(D_o - 2a_o)}\right] && \text{if} \quad \frac{b_o}{D_o} < 0{,}25 \\ S_o &= a_o b_o && \text{if} \quad \frac{b_o}{D_o} < 0{,}10 \end{aligned}\right\} \quad \text{(E.3)}$$

For length of tube, the original cross-sectional area, S_o, shall be calculated from Formula (E.4):

$$S_o = \pi a_o (D_o - a_o) \quad \text{(E.4)}$$

© ISO 2019 – All rights reserved

Licensed copy: Brighton University User, University of Brighton, Version correct as of 10/09/2020

Annex F
(informative)

Estimation of the crosshead separation rate in consideration of the stiffness (or compliance) of the testing equipment

Formula (2) does not consider any elastic deformation of the testing equipment (frame, load cell, grips, etc.) during the application of force to the test piece. It is possible to estimate a compensation for the deflection of the testing equipment by using the stiffness of the test piece at the point of interest (e.g. $R_{p0,2}$). If the point of interest is beyond the elastic range (e.g. $R_{p0,2}$), the use of the stiffness of the test piece during the elastic portion of the stress strain curve will result in a grossly overestimated correction. The stiffness of the testing equipment shall also be known for the grip configuration and grip separation used. For some configurations, the effective stiffness of the testing equipment may increase substantially as the grips bite into the test piece during a test. It is imperative that the stiffness of the testing equipment be evaluated at the point of interest.

If desired, use the following procedure to calculate a crosshead separation rate that is compensated for the deflection of the testing equipment during a test, using the stiffness of the testing equipment at the point of interest and the slope of the stress-strain curve at the point of interest. It is recommended to check the resulting strain rate at the point of interest while doing a test to ensure that the calculation has been done appropriately.

The estimated strain rate, in reciprocal seconds, during a test at the point of interest is given by Formula (F.1) (see Reference [39]):

$$\dot{e}_m = \frac{v_c}{\frac{m \cdot S_o}{C_M} + L_c} \tag{F.1}$$

where

v_c is the crosshead separation rate, in millimetres per second;

m is the slope, in megapascals, of the stress-percentage extension curve at a given moment of the test (e.g. around the point of interest such as $R_{p0,2}$);

S_o is the original cross-section area, in square millimetres;

C_M is the stiffness, in newtons per millimetre, of the testing equipment (around the point of interest such as $R_{p0,2}$, if stiffness is not linear, e.g. when using wedge grips);

L_c is the parallel length, in millimetres, of the test piece.

NOTE The values of m and C_M derived from the linear portion of the stress/strain curve cannot be used.

Formula (2) does not compensate for the effects of compliance (see 10.3.2.1). When controlling the test by crosshead displacement, a better approximation of the required strain rate can be achieved by using the crosshead separation rate derived from Formula (F.2) (see Reference [40]):

$$v_c = \dot{e}_m \left(\frac{m \cdot S_o}{C_M} + L_c \right) \tag{F.2}$$

For using Formula (F.1) or (F.2), it is necessary to know the stiffness C_M of the complete used testing equipment (testing rig, load cell, clamping system for test pieces to be tested). The following procedure, firstly described in Reference [53], provides correct values for the stiffness C_M.

 © ISO 2019 – All rights reserved

Licensed copy: Brighton University User, University of Brighton, Version correct as of 10/09/2020

A test piece of the same geometry and similar properties to the material to be subsequently tested is tested using a slow known constant crosshead separation rate. Then the following parameters have to be determined:

— from the stress/strain diagram, the slope m around the point of interest;

— from the percentage extension/time curve, the resulting strain rate around the point of interest.

The stiffness can now be calculated using Formula (F.3) [conversion of Formula (F.1) or (F.2) according to C_M].

$$C_M = \frac{m \cdot S_o}{\frac{v_c}{\dot{e}_m} - L_c} \tag{F.3}$$

This procedure should only be used for materials with no discontinuous yielding behaviour in the relevant range. For testing materials which exhibits discontinuous or serrated yielding, the knowledge of the stiffness is not necessary because the estimated strain rate over the parallel length, $\dot{e}_{L_c}$ and the simplified Formula (2) (see 10.3.2.1) instead of Formula (F.2) should be used for the calculation of the crosshead separation rate v_c.

© ISO 2019 – All rights reserved

Licensed copy: Brighton University User, University of Brighton, Version correct as of 10/09/2020

Annex G
(normative)

Determination of the modulus of elasticity of metallic materials using a uniaxial tensile test

G.1 Background

Although ISO 6892-1 requires the generation of a straight line with a given offset parallel to the linear region of the stress-strain curve in order to determine the specified proof strength, R_p, of the material being tested, most users usually assume that the slope of the linear elastic region of the stress-strain curve corresponds to the modulus of elasticity of the material being tested since the modulus of elasticity, E, is given by the relationship E = stress/strain. However, in general, the Class 1 extensometer required for the tensile test is not sufficiently accurate for measuring the very small strains in the elastic region with sufficient precision to give modulus values with an acceptable level of uncertainty.

It is not required to use this annex to determine the slope of the elastic part of the stress-percentage extension curve for the determination of proof strength.

An additional description of the determination of the modulus of elasticity by tensile testing is given in ASTM E 111[52]. For information, see also SEP 1235[43].

G.2 General

This annex contains additional requirements for the determination of the modulus of elasticity using a uniaxial tensile test. This test method is limited to materials which meet the following criteria:

— negligible creep effects of the material in the evaluation range;

— sufficient straight line in the elastic range of the material in the evaluation range.

These requirements are related to the design of the testing equipment, the test piece and the evaluation of the test.

The modulus of elasticity is a characteristic material property and is used for the calculation of the elasticity of products and components conforming to Hooke's Law.

NOTE Typically, this test is performed as a separate test from the tensile test because of the limitation of the extensometer displacement.

G.3 Testing equipment

G.3.1 Accuracy of the testing equipment

G.3.1.1 Force-measuring device

The force-measuring system of the testing machine shall be in accordance with ISO 7500-1, class 1, in the relevant range.

G.3.1.2 Extensometer system

The extensometer system shall be in accordance with ISO 9513, class 0,5, in the relevant range.

 © ISO 2019 – All rights reserved

Licensed copy: Brighton University User, University of Brighton, Version correct as of 10/09/2020

The strain shall be measured on opposite sides of the test piece.

The use of a large extensometer gauge length (e.g. ≥50 mm) is recommended.

G.3.1.3 Resolution of the testing system

The resolution of the testing system shall be sufficient for obtaining at least 50 different discrete measured values in the evaluation range.

G.3.1.4 Measuring devices for the determination of the relevant test piece dimensions

All measuring devices used for the determination of the original cross-sectional area shall be calibrated to the appropriate standards with traceability to a national measurement system. The measuring device shall be able to guarantee an accuracy of the measured data of better than ±0,5 % of the measured value.

G.3.2 Method of gripping and alignment

The method of gripping and the alignment are important for the determination of the modulus of elasticity. For requirements regarding the method of gripping, see 10.2, and for further information, see ASTM E1012. Additional helpful information may be in ISO 23788.

It is recommended to use mechanical devices (e.g. stoppers) to position the test piece so that good alignment is achieved.

G.4 Test pieces

G.4.1 General

The test pieces shall be straight.

NOTE Bent or twisted test pieces cannot be tested according to this annex.

The test piece surface shall be in such a condition that it does not influence the test result.

Where residual stresses are present in the sample, as a result of either prior processing or sample preparation, the modulus values determined are sometimes not representative of the base material.

G.4.2 Determination of original cross-sectional area

For the determination of the original cross-sectional area, see Clause 7. In addition to the requirements in Clause 7, a minimum of three measurements for each dimension shall be performed. The original cross-sectional area, S_o, is the average cross-sectional area and shall be calculated from the measurements of the appropriate dimensions. The original cross-sectional area shall be determined with an accuracy of ±0,5 % or better.

G.5 Procedure

G.5.1 General

If the stress-strain curve up to R_{eH} or $R_{p0,2}$ is not known, a pre-test in advance of the measurement of the modulus of elasticity shall be performed.

G.5.2 Setting the force zero point

The setting of the force zero point shall be carried out in accordance with 10.1.

© ISO 2019 – All rights reserved

Licensed copy: Brighton University User, University of Brighton, Version correct as of 10/09/2020

G.5.3 Testing conditions

G.5.3.1 Testing rate

Compared to the other properties determined within the tensile test, the modulus of elasticity is less sensitive to the testing rate. The testing rate should be according to Method A Range 1. Other testing rates including the use of Method B are permitted.

The testing rate may be low to achieve the required number of data points for the analysis.

A constant crosshead separation rate may be used to avoid any discontinuities.

G.5.3.2 Data sampling frequency

The data sampling frequency shall be chosen in such a way that a minimum of 50 measured values is obtained in the relevant range (R_1, R_2).

The minimum data sampling frequency can be calculated by Formula (G.1):

$$f = \frac{N \cdot E \cdot \dot{e}}{R_2 - R_1} \tag{G.1}$$

where N is the number of measured values in the relevant range.

For steel with R_1 = 10 MPa and R_2 = 50 MPa and a testing rate of 0,000 07 s^{-1}, the data sampling frequency shall be greater than 18 Hz.

G.5.3.3 Testing procedure

If the test piece will be used more than one time for the modulus determination, the applied load shall not be greater than a value corresponding to 50 % of the expected R_{eH} or $R_{p0,2}$.

Otherwise, it is recommended to perform the test up to a point where plastic deformation can be observed.

G.6 Evaluation

G.6.1 Averaging the extensometry signals

The average strain, necessary for the calculation in G.6.2, is calculated for each stress value by averaging the strain from the opposite sides of the test piece.

Strain data from each side of the test piece may be displayed and differences in the slope of the two curves may be reduced by optimizing the testing equipment (reducing of bending). For further information, see ASTM E 1012. Additional helpful information can be found in ISO 23788.

G.6.2 Calculation of the modulus of elasticity

For evaluation of the recorded data, the following interactive method is recommended.

The method is based on a numerical determination of the line of best fit for the elastic range (least squares method) including a visual evaluation of the match between this line of best fit and the curve of actual measurement readings, followed by recalculation with altered parameters, where appropriate. Therefore, it corresponds essentially to a manual analysis of an X-Y graph.

The use of this method depends on the availability of suitable computer software.

 © ISO 2019 – All rights reserved

Licensed copy: Brighton University User, University of Brighton, Version correct as of 10/09/2020

A linear regression of stress over strain (G.4) shall be carried out between a lower stress value R_1 and an upper stress value R_2 (alternatively, strain values e_1 and e_2 may be used):

$$R = \frac{E \cdot e}{100\,\%} + b \tag{G.2}$$

where

R is the stress in megapascals;

E is the modulus of elasticity in megapascals;

e is the percentage extension in percent;

b is the stress offset in megapascals.

The straight line determined in this way shall be drawn into the stress-strain diagram, whereas the initial part of this diagram is magnified for this purpose. The match between the straight line and the curve shall be evaluated visually. It can be useful to consider the coefficient of determination R^2, which should be close to 1 (>0,999 5), whereby the number of considered data points should be at least 50.

Another helpful tool is the calculation of the relative standard deviation. The relative standard deviation takes into account the coefficient of determination R^2 and the number of considered data points among other statistical data. It should be less than 1 %.

By shifting the lower or upper values and re-calculating the formula accordingly, the line of best fit (i.e. the modulus of elasticity) can be adapted to the curve.

The following values are recommended as starting points for the regression calculation:

— lower stress value R_1: ≈ 10 % of R_{eH} or $R_{p0,2}$;

— upper stress value R_2: ≈ 40 % of R_{eH} or $R_{p0,2}$.

Additionally, the strain offset can be calculated according to Formula (G.3):

$$x_{(y=0)} = \frac{-b}{E} \tag{G.3}$$

Under optimal testing conditions, the chosen default values will not have a great influence on the result of the calculation. Example: if the material fulfils the general conditions described in G.2 and the determined default values R_1 and R_2 are 10 % and 40 % of R_{eH} or $R_{p0,2}$, respectively, a re-calculation of the formula by using default values inside the determined interval (e.g. 10 % to 20 %, 20 % to 30 %, 30 % to 40 % of R_{eH} or $R_{p0,2}$, respectively) will not influence the result significantly.

In cases where the material exhibits no straight elastic line, e.g. cast iron, or the data for the regression is not of sufficient quality, i.e. $R^2 < 0{,}999\,5$, the modulus of elasticity should not be determined.

It is recommended to perform regular checks on the repeatability of the results using suitable reference test pieces in the configuration used for testing.

Suitable reference test pieces can be manufactured in-house and should have the same geometry as the test pieces.

Further mathematical approaches and computer analysis methods are available for the evaluation of the modulus of elasticity.

© ISO 2019 – All rights reserved

Licensed copy: Brighton University User, University of Brighton, Version correct as of 10/09/2020

G.7 Measurement uncertainty

G.7.1 General

The estimation of the measurement uncertainty for a determined modulus of elasticity can be done according to CWA 15261-2:2005, A.5[9] or according to Annex K.

NOTE The estimation of the measurement uncertainty according to CWA 15261–2 is based on absolute values. This results in different estimations of the respective single uncertainty budgets, if e.g. the test piece dimensions or the extensometer gauge length differ. The estimation of the measurement uncertainty according to Annex K is based on relative estimations. Therefore, the relative estimations normally will not change. Exception is the relative measurement uncertainty budget for the strain measurement. Because of the small extensions during the test in the elastic part, the absolute uncertainty of the strain measurement is relevant for the uncertainty contribution (according to ISO 9513).

G.7.2 Estimation of the measurement uncertainty according to CWA 15261-2

G.7.2.1 General

NOTE In CWA 15261–2, the symbol L_o is used for the gauge length and m_E for the slope of the elastic part of the force-extension curve. For conformation with this document and to prevent confusion in the following (differing from CWA), the symbol L_e is used for the extensometer gauge length and S_E for the slope of the elastic part of the force-extension curve.

The measurement uncertainty according to CWA 15261-2 is given by Formula (G.4):

$$u_c(E)=\sqrt{\left(\frac{L_e}{S_o}\right)^2\cdot u^2(S_E)+\left(\frac{S_E}{S_o}\right)^2\cdot u^2(L_e)+\left(-\frac{S_E L_e}{S_o^2}\right)^2\cdot u^2(S_o)} \quad \text{(G.4)}$$

where

L_e is the extensometer gauge length;

S_o is the original cross-sectional area;

S_E is the slope of the force-extension curve;

$u(S_E)$ is the uncertainty of slope of the force-extension curve;

$u(L_e)$ is the uncertainty of extensometer gauge length;

$u(S_o)$ is the uncertainty of original cross-sectional area.

G.7.2.2 Example for the calculation of the measurement uncertainty

Table G.1 shows the results of an example for the measurement uncertainty according to CWA 15261-2 for a measured modulus of elasticity of 186,7 GPa[54] based on the following data:

L_e: 50 mm

S_o: 78,5 mm^2

S_E: 293,07 kN/mm

$u(L_e)$: 0,144 mm

$u(S_o)$: 0,785 mm^2

$u(S_E)$: 0,064 kN/mm

 © ISO 2019 – All rights reserved

Licensed copy: Brighton University User, University of Brighton, Version correct as of 10/09/2020

Table G.1 — Uncertainty contribution, example 1 according to CWA 15261-2

Parameter	Sensitivity coefficients[a]	Uncertainty contribution[a]
$\frac{L_e}{S_o}$	0,637 mm^{-1}	
$u(S_E)$		0,064 $\frac{\text{kN}}{\text{mm}}$
$\frac{S_E}{S_o}$	3,733 $\frac{\text{kN}}{\text{mm}^3}$	
$u(L_e)$		0,144 mm
$-\frac{S_E L_e}{S_o^2}$	−2,378 $\frac{\text{kN}}{\text{mm}^4}$	
$u(S_o)$		0,785 mm^2
$u_c(E)$[b]		1,9 $\frac{\text{kN}}{\text{mm}^2}$

[a] Values are given for information only.

[b] $u_c(E)$ is calculated according to Formula (G.5).

$$u_c(E)=\sqrt{0{,}637^2\cdot 0{,}064^2+3{,}733^2\cdot 0{,}144^2+(-2{,}378)^2\cdot 0{,}785^2}=1{,}9\,\text{GPa} \tag{G.5}$$

For a 95 % level of confidence, the combined uncertainty shall be multiplied by a coverage factor, k = 2 [see Formula (G.6)].

$$U(E)=k\cdot u_c(E)=2\cdot 1{,}9\,\text{GPa}=3{,}8\,\text{GPa} \tag{G.6}$$

This is 2,0 % based on the modulus of elasticity of 186,7 GPa.

The result of the test for the modulus of elasticity is: 186,7 GPa ± 3,8 GPa (k = 2, 95 % confidence level).

That means that, with a confidence level of 95 %, the true value for the modulus of elasticity is in the range between 182,9 GPa and 190,5 GPa.

G.7.3 Estimation of the measurement uncertainty according to Annex K

Table G.2 indicates the uncertainty contribution that should be considered for the modulus of elasticity according to Annex K.

© ISO 2019 – All rights reserved

Licensed copy: Brighton University User, University of Brighton, Version correct as of 10/09/2020

Table G.2 — Uncertainty contribution, example 2 according to Annex K

Parameter	Uncertainty contribution[a] %
Standard deviation of slope $S_{m(rel)}$	0,2
Standard deviation of X-values of the X-Y graph, S_X [b, c]	3
Standard deviation of Y-values of the X-Y graph, S_Y	1
Extensometer gauge length, L_e	0,5
Original cross-sectional area, S_o	1

[a] Values are given for information only.

[b] S_m consists of S_x and S_y, therefore S_x and S_y should be considered.

[c] Based on the small extensions measured in the test, the absolute value (1,5 µm of a class 0,5 extensometer) has to be used. Example: ΔR = 200 MPa, E = 200 GPa, L_e = 50 mm results in an extension of 0,05 mm. By using the bias error of 1,5 µm (absolute value of an 0,5 class extensometer), the uncertainty contribution is 3 %.

The combined uncertainty for the modulus of elasticity, expressed as a percentage, is given by Formula (G.7).

$$u_c(E)=\sqrt{\left(\frac{0,2}{\sqrt{3}}\right)^2+\left(\frac{3}{\sqrt{3}}\right)^2+\left(\frac{1}{\sqrt{3}}\right)^2+\left(\frac{0,5}{\sqrt{3}}\right)^2+\left(\frac{1}{\sqrt{3}}\right)^2}=1,9\,\% \tag{G.7}$$

For a 95 % level of confidence, the combined uncertainty shall be multiplied by a coverage function, k = 2 [see Formula (G.8)].

$$U(E)=k\cdot u_c(E)=2\cdot 1,9\,\%=3,8\,\% \tag{G.8}$$

The result of the test for the modulus of elasticity is: (186,7 ± 7,1) GPa (k = 2, 95 % confidence level).

This means that, with a confidence level of 95 %, the true value for the modulus of elasticity is in the range between 179,6 GPa and 193,8 GPa.

G.7.4 Proficiency test

A proficiency test "Young's Modulus" was performed and the measurement uncertainty for all participants was determined. An measurement uncertainty for the determination of the modulus of elasticity between 1,2 % and 5 % (at 95 % confidence level) is appropriate[54].

G.8 Test report

The test report shall contain the information required in Clause 22 a) to f). Furthermore, the following information shall be included:

a) type of extensometer system;

b) default stress values R_1 and R_2 (in MPa) or the default strain values e_1 and e_2 (in %), respectively;

c) number of measured values in the evaluation range (between R_1 and R_2 or e_1 and e_2);

d) modulus of elasticity E (in GPa), which should be rounded to the nearest 0,1 GPa according to ISO 80000-1;

e) measurement uncertainty including level of confidence (in GPa) and the method of determination (CWA 15261-2:2005, A.5 or Table G.2);

f) coefficient of determination R^2 of the best fit of the straight line or standard deviation S_m (in GPa) or relative standard deviation $S_{m(rel)}$ (in %).

© ISO 2019 – All rights reserved

Licensed copy: Brighton University User, University of Brighton, Version correct as of 10/09/2020

G.9 Additional considerations

In general, it is difficult to determine reliable values of modulus in the tensile test unless special high resolution averaging extensometer systems are employed, and such devices are not generally suitable for covering the full range of the tensile test. If a single sided extensometer or clip gauge is employed, then any slight misalignment of the test piece can result in large errors of the apparent modulus measurement.

G.10 Other methods for determining modulus

The tensile test is not the best method for determining reliable values of modulus of elasticity, and other alternative methods, e.g. impulse excitation or ultrasonics, are preferable. More information can be found in References [17] and [44] to [46].

G.11 Uncertainty and reproducibility

Full uncertainty budgets are not included here but procedures for estimating uncertainty based on the GUM[4] associated with modulus measurements have been developed as part of the European UNCERT project, both for tensile testing[47] and for dynamic measurements[48].

Reproducibility of modulus measurements based on 2 times the standard deviation (s) from a series of tensile test inter-comparison exercises, collated as part of the TENSTAND Project, are summarized in Table G.3[45].

Table G.3 — Overview of round robin tests: modulus of elasticity or slope of the elastic line, respectively

Reference	Authors	Year	Material	Reproducibility (±2s) %
Testing Materials of Construction	Unwin[50]	1910	Mild steel	2
VAMAS	Lord, Roebuck and Orkney[51]	1995	SiC/Al MMC	6
BCR Tensile Reference Material CRM 661	Ingelbrecht and Loveday[29]	2000	Nimonic 75	12
TENSTAND WP3 Modulus Measurement	Lord, Rides and Loveday[49]	2005	Various	5–25
TENSTAND WP2 ASCII Data Files	Lord, Loveday, Rides and McEnteggart[22]	2005	Various - ASCII datafiles	1–6

The majority of the results reported above were based on the criteria laid down in ISO 6892 or the equivalent earlier standards. It should also be considered that the aim of several tests is the determination of common tensile test properties (e.g. also the generation of ASCII data sets in TENSTAND WP2). So the typically single sided Class 1 extensometers with a limited accuracy in the elastic range were employed and the slope of the elastic part of the stress-percentage extension curve m_E was determined with the aim of evaluation of $R_{p0,2}$ and other properties and not to determine the intrinsic material property modulus of elasticity E. If double sided high resolution Class 0,5 extensometers are used as specified in this annex, the uncertainty of measurement should be less and the reproducibility much better.

© ISO 2019 – All rights reserved

Annex H
(informative)

Measuring the percentage elongation after fracture if the specified value is less than 5 %

Precautions should be taken when measuring the percentage elongation after fracture if the specified value is less than 5 %.

One of the recommended methods is as follows.

Prior to the test, a very small mark should be made close to each end of the parallel length. Using a pair of needle-pointed dividers set at the gauge length, an arc is scribed with the mark as a centre. After fracture, the broken test piece should be placed in a fixture and axial compressive force applied, preferably by means of a screw, sufficient to firmly hold the pieces together during measurement. A second arc of the same radius should then be scribed from the original centre closest to fracture, and the distance between the two scratches measured by means of a measuring microscope or other suitable instrument. In order to render the fine scratches more easily visible, a suitable dye film may be applied to the test piece before testing.

NOTE Another method is described in 20.2 (measuring extension at fracture using an extensometer).

Licensed copy: Brighton University User, University of Brighton, Version correct as of 10/09/2020

© ISO 2019 – All rights reserved

Licensed copy: Brighton University User, University of Brighton, Version correct as of 10/09/2020

Annex I
(informative)

Measurement of percentage elongation after fracture based on subdivision of the original gauge length

I.1 To avoid having to reject test pieces where the position of the fracture does not comply with the conditions of 20.1, but where the complete necking occurs inside the gauge length, the following method may be used:

a) before the test, subdivide the original gauge length, L_o, into N equal lengths of 5 mm (recommended) to 10 mm;

b) after the test, use the symbol X to denote the gauge mark on the shorter part of the test piece and the symbol Y for the gauge mark on the longer part of the test piece which is at the same distance from the fracture as mark X.

I.2 If n is the number of intervals between X and Y, the elongation after fracture is determined as follows.

a) If $N - n$ is an even number [see Figure I.1 a)], measure the distance between X and Y, l_{XY}, and the distance from Y to the graduation mark Z, l_{YZ}, located at $(N - n)/2$ intervals beyond Y.

Calculate the percentage elongation after fracture, A, using Formula (I.1):

$$A = \frac{l_{XY} + 2l_{YZ} - L_o}{L_o} \cdot 100 \qquad \text{(I.1)}$$

b) If $N - n$ is an odd number [see Figure I.1 b)], measure the distance between X and Y and the distance from Y to the graduation marks Z' and Z'', $l_{YZ'}$, and $l_{YZ''}$, located respectively at $(N - n - 1)/2$ and $(N - n + 1)/2$ intervals beyond Y.

Calculate the percentage elongation after fracture using Formula (I.2):

$$A = \frac{l_{XY} + l_{YZ'} + l_{YZ''} - L_o}{L_o} \cdot 100 \qquad \text{(I.2)}$$

© ISO 2019 – All rights reserved

Licensed copy: Brighton University User, University of Brighton, Version correct as of 10/09/2020

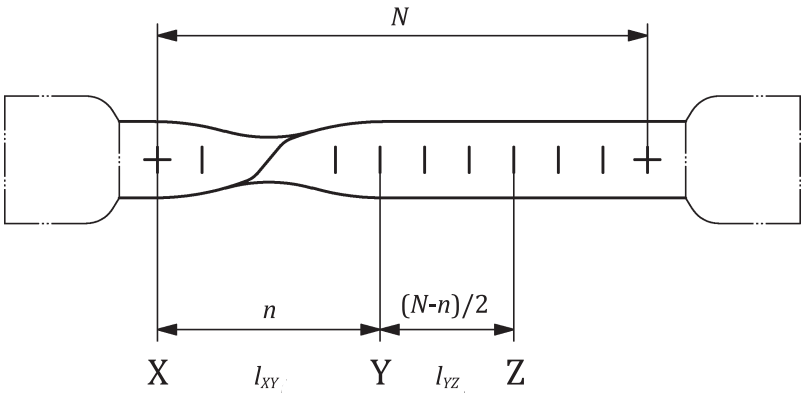

a) $N - n$ **is an even number**

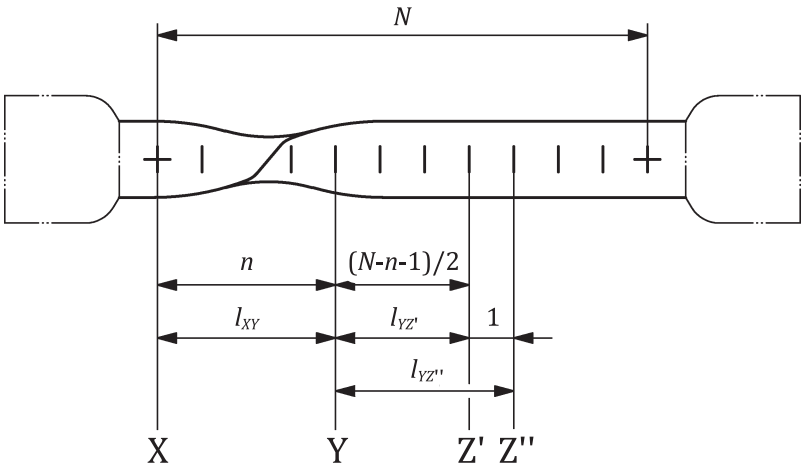

b) $N - n$ **is an odd number**

Key

n	number of intervals between X and Y
N	number of equal lengths
X	gauge mark on the shorter part of the test piece
Y	gauge mark on the longer part of the test piece
Z, Z′, Z″	gauge marks

NOTE The shape of the test-piece heads is only given as a guide.

Figure I.1 — Examples of measurement of percentage elongation after fracture

© ISO 2019 – All rights reserved

Annex J
(informative)

Determination of the percentage plastic elongation without necking, A_{wn}, for long products such as bars, wire, and rods

This method is to be performed on the longer part of a broken tensile test piece.

Before the test, equidistant marks are made on the gauge length, the distance between two successive marks being equal to a fraction of the initial gauge length, L'_o. The marking of the initial gauge length, L'_o, should be accurate to within ±0,5 mm. The measurement of the final gauge length after fracture, L'_u, is made on the longest broken part of the test piece and should be accurate to within ±0,5 mm.

In order for the measurement to be valid, the following two conditions should be met:

a) the limits of the measuring zone should be located at least $5d_o$ from the fracture and at least $2{,}5d_o$ from the grip;

b) the measuring gauge length should be at least equal to the value specified in the product standard.

The percentage plastic elongation without necking is calculated by Formula (J.1):

$$A_{wn} = \frac{L'_u - L'_o}{L'_o} \cdot 100 \qquad \text{(J.1)}$$

NOTE For many metallic materials, the maximum force occurs in the range where necking starts. This means that the values for A_g and A_{wn} for these materials are nearly equal. Large differences are found in highly cold deformed material such as double reduced tin plate or irradiated structural steel or tests performed at elevated temperatures.

Licensed copy: Brighton University User, University of Brighton, Version correct as of 10/09/2020

© ISO 2019 – All rights reserved

Licensed copy: Brighton University User, University of Brighton, Version correct as of 10/09/2020

Annex K
(informative)

Estimation of the uncertainty of measurement

K.1 General

This annex gives guidance on how to estimate the uncertainty of the values determined in accordance with this document. It is not possible to give an absolute statement of uncertainty for this test method because there are both *material independent* and *material dependent* contributions to the uncertainty statement. ISO/IEC Guide 98-3[4] is a comprehensive document of over 90 pages based upon rigorous statistical methods for the summation of uncertainties from various sources. Its complexity has provided the driving force for a number of organizations to produce simplified versions (see NIS 80[15], NIS 3003[16], and Reference [23]). These documents all give guidance on how to estimate uncertainty of measurement based upon an "uncertainty budget" concept. For detailed descriptions, see EN 10291[11] and Reference [24]. Additional information on the estimation of uncertainty is available in References [25] and [26]. The measurement uncertainty presented here does not describe the scatter resulting from the inhomogeneity of the material, e.g. from one batch, from the beginning and at the end of an extruded profile or a rolled coil, or of different positions within a casting. The uncertainty results from the scatter of the data obtained from different tests, different machines, or different laboratories taken from an ideal homogeneous material. In the following, the different influences are described and guidance for the determination of the uncertainties is given.

The reproducibility values used in Tables K.2 to K.4 are half width intervals in accordance with ISO/IEC Guide 98-3[4] and should be interpreted as the value of plus and minus (±) scatter tolerances.

K.2 Estimation of uncertainty

K.2.1 General

The standard uncertainty, u, of the value of a parameter can be estimated in two ways.

K.2.2 Type A — By repeated measurement

$$u = \frac{s}{\sqrt{n}} \tag{K.1}$$

where

s is the standard deviation of the measurements;

n is the number of observations being averaged to report the result of the measurement under normal circumstances.

K.2.3 Type B — From some other source, e.g. calibration certificates or tolerances

Here, the true value is equally likely to occur anywhere within the defined interval so the distribution is described as rectangular or uniform. Here the standard uncertainty is given by Formula (K.2):

$$u = \frac{a}{\sqrt{3}} \tag{K.2}$$

where a is half the width of the interval in which the quantity is assumed to lie.

 © ISO 2019 – All rights reserved

Licensed copy: Brighton University User, University of Brighton, Version correct as of 10/09/2020

Often the estimation of a quantity, y, involves the measurement of other quantities. The estimation of the uncertainty in y shall take account of the contributions of the uncertainties in all these measurements. It is thus known as a combined uncertainty. If the estimation simply involves the addition or subtraction of a series of measurements, $x_1, x_2 \ldots x_n$, then the combined uncertainty in y, $u(y)$, is given by Formula (K.3):

$$u(y)=\sqrt{\left(u(x_1)^2+u(x_2)^2+\ldots+u(x_n)^2\right)} \tag{K.3}$$

where $u(x_1)$ is the uncertainty in the parameter x_1, etc.

K.3 Equipment parameters effect on the uncertainty of test results

The uncertainty of the results determined from a tensile test contains components due to the equipment used. Various test results have differing uncertainty contributions depending on the way they are determined. Table K.1 indicates the equipment uncertainty contributions that should be considered for some of the more common material properties determined in a tensile test. Some of the test results can be determined with a lower uncertainty than others, e.g. the upper yield strength, R_{eH}, is only dependent on the uncertainties of measurement of force and cross-sectional area, while proof strength, R_p, is dependent on force, extension, gauge length, cross-sectional area, and other parameters. For reduction of area, Z, the measurement uncertainties of cross-sectional area both before and after fracture need to be considered.

Table K.1 — Uncertainty contributors to the test results, due to the measuring devices

Parameter	Test results					
	R_{eH}	R_{eL}	R_m	R_p	A	Z
Force	X	X	X	X	—	—
Extension	—	—	—	X	X	—
Gauge length	—	—	—	X	X	—
S_o	X	X	X	X	—	X
S_u	—	—	—	—	—	X
X Relevant. — Not relevant.						

The uncertainty of the test results listed in Table K.1 may be derived from the calibration certificates of the devices used for the determination of the test results. For example, the standard uncertainty value for a force parameter using a machine with a certified uncertainty of 1,4 %, would be 1,4/2 or 0,70 %. It should be noted that a Class 1,0 classification (for the tensile testing machine or extensometer) does not necessarily guarantee an uncertainty of 1 %. The uncertainty can be significantly higher or lower (for force example, see ISO 7500-1), and the equipment certificate should be consulted. Uncertainty contributions due to factors such as drift of the equipment since its calibration and its use in different environmental conditions should also be taken into account.

Continuing the example according to Formula (K.3), taking account of the uncertainties in force or extensometer measurements, the combined uncertainty of the test results for R_{eH}, R_{eL}, R_m and A is $\sqrt{\left(\frac{1,4}{2}\right)^2+\left(\frac{1}{\sqrt{3}}\right)^2}=\sqrt{0,70^2+0,58^2}=0,91\,\%$, using the square root of the sum of the squares approach.

When estimating the uncertainty of R_p, it is not appropriate to simply apply the summation of the standard uncertainty components from the classification of the measuring devices. The force-extension curve shall be examined. For example, if the determination of R_p occurs on the force-extension curve at a point on the curve where the force indication does not change over the range of the extension measuring uncertainty, the uncertainty of the force indication due to the extension measuring device is insignificant. On the other hand, if the determination of R_p occurs on the force-extension curve at a point where the force is changing greatly in relation to the extension, the uncertainty in the reported force can be much greater than the uncertainty component due to the device classification. Additionally, the

© ISO 2019 – All rights reserved

determination of the slope of the elastic part of the stress-percentage extension curve m_E can influence the result of R_p if the curve in this range is not an ideal straight line.

Table K.2 — Examples of uncertainty contributions for different test results, due to the measuring devices

Parameter	Uncertainty contribution[a] %				
	R_{eH}	R_{eL}	R_m	A	Z
Force	1,4	1,4	1,4	—	—
Extension	—	—	—	1,4	—
Gauge length, L_e, L_o	—	—	—	1	—
S_o	1	1	1	—	1
S_u	—	—	—	—	2

[a] Values are given for information only.

The combined uncertainty for Z, u_Z, expressed as a percentage, is given by Formula (K.4):

$$u_Z = \sqrt{\left(\frac{a_{S_o}}{\sqrt{3}}\right)^2 + \left(\frac{a_{S_u}}{\sqrt{3}}\right)^2} = \sqrt{\left(\frac{1}{\sqrt{3}}\right)^2 + \left(\frac{2}{\sqrt{3}}\right)^2} = \sqrt{0{,}577^2 + 1{,}155^2} = \sqrt{0{,}33 + 1{,}33} = 1{,}29 \quad \text{(K.4)}$$

Using a similar approach, examples of combined standard uncertainties for a range of testing results are shown in Table K.3.

Table K.3 — Examples for combined uncertainty

Combined uncertainty for different parameters %				
R_{eH}	R_{eL}	R_m	A	Z
0,91	0,91	0,91	0,91	1,29

In accordance with ISO/IEC Guide 98-3[4], the total expanded uncertainty is obtained by multiplying the combined standard uncertainties by a coverage function, k. For a 95 % level of confidence, k = 2.

Table K.4 — Examples for a 95 % level of confidence, k = 2 (based on Table K.3)

95 % level of confidence, k = 2 for different parameters %				
R_{eH}	R_{eL}	R_m	A	Z
1,82	1,82	1,82	1,82	2,58

Only uncertainty contributions with the same unit can be added in the calculation shown. For further information and more detailed information on measurement uncertainty in tensile testing, see CWA 15261-2[9] and Reference [27].

It is highly recommended that scheduled periodic sample testing and charting of the standard deviation of the results related to a particular material test be performed. The resultant standard deviations of the data from the sample tests over time can provide a good indication of whether the test data uncertainty is within expectations.

© ISO 2019 – All rights reserved

Licensed copy: Brighton University User, University of Brighton, Version correct as of 10/09/2020

Licensed copy: Brighton University User, University of Brighton, Version correct as of 10/09/2020

K.4 Parameters depending on the material and/or the test procedure

The precision of the test results from a tensile test is dependent upon factors related to the material being tested, the testing machine, the test procedure and the methods used to calculate the specified material properties. Ideally, all the following factors should be considered:

a) test temperature;

b) testing rates;

c) the test piece geometry and machining;

d) the method of gripping the test piece and the axiality of the application of the force;

e) the testing machine characteristics (stiffness, drive and control mode);

f) human and software errors associated with the determination of the tensile properties;

g) extensometer mounting geometry.

The influence of these factors depends on specific material behaviour and cannot be given as a defined value. If the influence is known, it can be taken into account in the calculation of the uncertainty as shown in K.3. It can be possible to include further sources of uncertainty in the estimation of the expanded measurement uncertainty. This can be done using the following approach.

a) The user has to identify all additional possible sources, which can have an effect, directly or indirectly on the test parameter to be determined.

b) Relative contributions may vary according to the material tested and the special test conditions. Individual laboratories are encouraged to prepare a list of possible sources of uncertainty and evaluate their influence on the result. If a significant influence was determined, this uncertainty, u_i, has to be included in the calculation. The uncertainty, u_i, is the uncertainty of the source i on the value to be determined as a percentage as shown in Formula (K.3). For u_i the distribution function of the specific parameter (normal, rectangular, etc.) has to be identified. Then the influence on the result on the one sigma level has to be determined. This is the standard uncertainty.

Interlaboratory tests may be used to determine the overall uncertainty of results under conditions close to those used at industrial laboratories, but such tests do not separate effects related to the material inhomogeneity from those attributable to the testing method (see Annex L).

It should be appreciated that as suitable certified reference materials become available, they will offer a useful means of estimating the measurement uncertainty on any given testing machine including the influence of grips, bending, etc., which at present are difficult to quantify. An example of a certified reference material is BCR-661 (Nimonic 75) available from IRMM[1)] (see CWA 15261-2[9]).

Alternatively, it is recommended that regular "in-house" tests be carried out for quality control purposes on material with a low level of scatter in properties (non-certified reference materials) (see Reference [28]).

There are some examples for which it is very difficult to give accurate uncertainty values without reference materials. When reliable uncertainty values are important, in some cases, the use of a certified reference material or non-certified reference material to confirm uncertainty of measurements is recommended. If no reference material can be used, suitable intercomparison exercises are needed (see References [21] and [30]).

1) This information is given for the convenience of users of this document and does not constitute an endorsement by ISO of the product named. Equivalent products may be used if they can be shown to lead to the same results.

© ISO 2019 – All rights reserved

Annex L
(informative)

Precision of tensile testing — Results from interlaboratory programmes

An indication of the typical scatter in tensile test results for a variety of materials that have been reported during laboratory intercomparison exercises, which include both material scatter and measurement uncertainty, is shown in Tables L.1 to L.4. The results for the reproducibility are expressed as percentages calculated by multiplying by 2 the standard deviation of the respective parameter, e.g. R_p, R_m, Z, and A, and dividing the result by the mean value of the parameter, thereby giving values of reproducibility which represent the 95 % confidence level, in accordance with the recommendations given in ISO/IEC Guide 98-3[4] and which may be directly compared with the expanded uncertainty values calculated by alternative methods.

Licensed copy: Brighton University User, University of Brighton, Version correct as of 10/09/2020

© ISO 2019 – All rights reserved

Licensed copy: Brighton University User, University of Brighton, Version correct as of 10/09/2020

Table L.1 — Yield strengths (0,2 % proof strengths or upper yield strengths) — Reproducibility from laboratory intercomparison exercises (graphic presentation of the values is given in Figure L.1)

Material	Code	Yield strength MPa	Reproducibility ± %	Reference
Aluminium				
Sheet	AA5754	105,7	3,2	[31]
Sheet	AA5182-O	126,4	1,9	[20]
Sheet	AA6016-T4	127,2	2,2	[20]
	EC-H 19	158,4	4,1	[33]
	2024-T 351	362,9	3,0	[33]
Steel				
Sheet	DX56	162,0	4,6	[31]
Low carbon, plate	HR3	228,6	8,2	[34]
Sheet	ZStE 180	267,1	9,9	[31]
AISI 105	P245GH	367,4	5,0	[34]
	C22	402,4	4,9	[33]
Plate	S355	427,6	6,1	[31]
Austenitic S S	SS316L	230,7	6,9	[31]
Austenitic S S	X2CrNi18-10	303,8	6,5	[34]
Austenitic S S	X2CrNiMo18-10	353,3	7,8	[34]
AISI 316	X5CrNiMo17-12-2	480,1	8,1	[33]
Martensitic S S	X12Cr13	967,5	3,2	[33]
High Strength	30NiCrMo16	1 039,9	2,0	[34]
Nickel alloys				
INCONEL 600	NiCr15Fe8	268,3	4,4	[33]
Nimonic 75	(BCR-661)	298,1	4,0	[29]
Nimonic 75	(BCR-661)	302,1	3,6	[31]

© ISO 2019 – All rights reserved

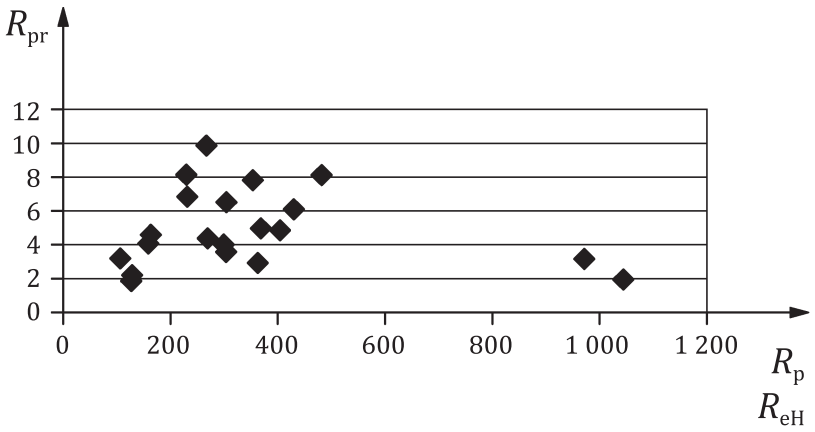

Key

R_{eH} upper yield strength, expressed in MPa

R_p proof strength, expressed in MPa

R_{pr} reproducibility, expressed in %

Figure L.1 — Presentation of the values given in Table L.1

Table L.2 — Tensile strengths, R_m — Reproducibility from laboratory intercomparison exercises (graphic presentation of the values is given in Figure L.2)

Material	Code	Tensile strength MPa	Reproducibility ± %	Reference
		Aluminium		
Sheet	AA5754	212,3	4,7	[31]
Sheet	AA5182-0	275,2	1,4	[20]
Sheet	AA6016-T4	228,3	1,8	[20]
	EC-H 19	176,9	4,9	[33]
	2024-T 351	491,3	2,7	[33]
		Steel		
Sheet	DX56	301,1	5,0	[31]
Low carbon, plate	HR3	335,2	5,0	[34]
Sheet	ZStE 180	315,3	4,2	[31]
AISI 105	Fe510C	552,4	2,0	[34]
	C22	596,9	2,8	[33]
Plate	S355	564,9	2,4	[31]
Austenitic S S	SS316L	568,7	4,1	[31]
Austenitic S S	X2CrNi18-10	594,0	3,0	[34]
Austenitic S S	X2CrNiMo18-10	622,5	3,0	[34]
AISI 316	X7CrNiMo17-12-2	694,6	2,4	[33]
Martensitic S S	X12Cr13	1 253,0	1,3	[33]
High Strength	30NiCrMo16	1 167,8	1,5	[34]

© ISO 2019 – All rights reserved

Licensed copy: Brighton University User, University of Brighton, Version correct as of 10/09/2020

Material	Code	Tensile strength MPa	Reproducibility ± %	Reference
Nickel alloys				
INCONEL 600	NiCr15Fe8	695,9	1,4	[33]
Nimonic 75	(BCR-661)	749,6	1,9	[29]
Nimonic 75	(BCR-661)	754,2	1,3	[31]

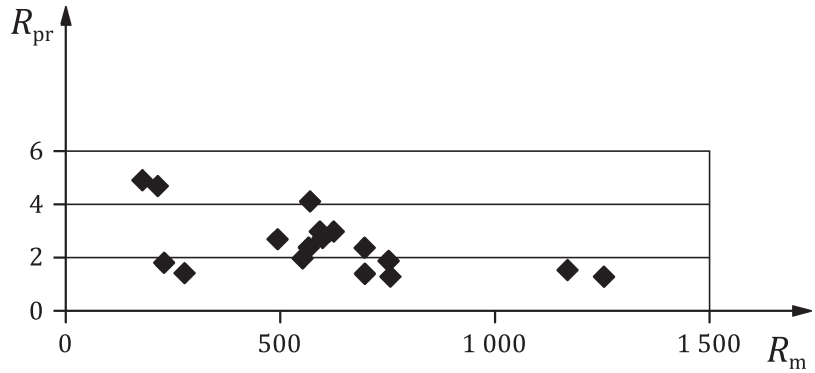

Key

R_m tensile strength, expressed in MPa

R_{pr} reproducibility, expressed in %

Figure L.2 — Presentation of the values given in Table L.2

Licensed copy: Brighton University User, University of Brighton, Version correct as of 10/09/2020

Licensed copy: Brighton University User, University of Brighton, Version correct as of 10/09/2020

Table L.3 — Elongation after fracture — Reproducibility from laboratory intercomparison exercises (graphic presentation of the values is given in Figure L.3)

Material	Code	Elongation after fracture A %	Reproducibility ± %[a]	Reference
Aluminium				
Sheet	AA5754	27,9	13,3	[31]
Sheet	AA5182-0	26,6($A_{80\ mm}$)	10,6	[20]
Sheet	AA6016-T4	25,9($A_{80\ mm}$)	8,4	[20]
	EC-H 19	14,6	9,1	[33]
	2024-T 351	18,0	18,9[a]	[33]
Steel				
Sheet	DX56	45,2	12,4	[31]
Low carbon, plate	HR3	38,4	13,8	[34]
Sheet	ZstE 180	40,5	12,7	[31]
AISI 105	Fe510C	31,4	14,0	[34]
	C22	25,6	10,1	[33]
Plate	S355	28,5	17,7	[31]
Austenitic S S	SS316L	60,1	27,6	[31]
Austenitic S S	X2CrNi18-10	52,5	12,6	[34]
Austenitic S S	X2CrNiMo18-10	51,9	12,7	[34]
AISI 316	X5CrNiMo17-12-2	35,9	14,9	[33]
Martensitic S S	X12Cr13	12,4	15,5	[33]
High Strength	30NiCrMo16	16,7	13,3	[34]
Nickel alloys				
INCONEL 600	NiCr15Fe8	41,6	7,7	[33]
Nimonic 75	(BCR-661)	41,0	3,3	[29]
Nimonic 75	(BCR-661)	41,0	5,9	[31]

[a] The reproducibility is expressed as a percentage of the respective mean value of A for the given material; thus, for 2024 – T 351 aluminium, the absolute value of A is (18,0 ± 3,4) %.

© ISO 2019 – All rights reserved

Licensed copy: Brighton University User, University of Brighton, Version correct as of 10/09/2020

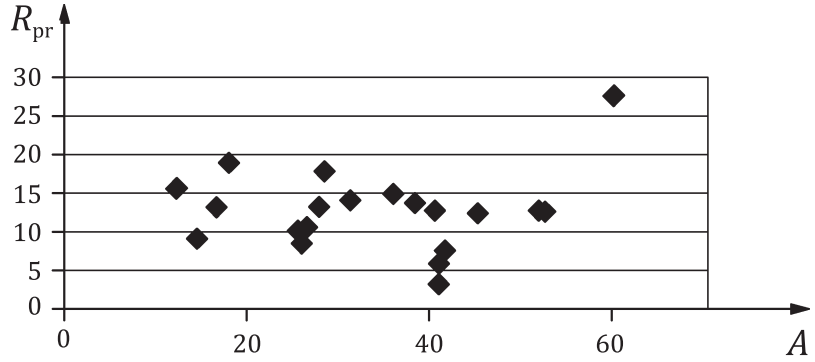

Key

A elongation after fracture, expressed in %

R_{pr} reproducibility, expressed in %

Figure L.3 — Presentation of the values given in Table L.3

Table L.4 — Reduction of area Z — Reproducibility from laboratory intercomparison exercises (graphic presentation of the values is given in Figure L.4)

Material	Code	Reduction of area Z %	Reproducibility ± % [a]	Reference
Aluminium				
	EC-H 19	79,1	5,1	[33]
	2024-T 351	30,3	23,7[b]	[33]
Steel				
Low carbon, plate	HR3			
AISI 105	Fe510C	71,4	2,7	[34]
	C22	65,6	3,8	[33]
Austenitic S S	X2CrNi18-10			
Austenitic S S	X2CrNiMo18-10	77,9	5,6	[34]
AISI 316	X5CrNiMo17-12-2	71,5	4,5	[33]
Martensitic S S	X12Cr13	50,5	15,6[b]	[33]
High Strength	30NiCrMo16	65,6	3,2	[34]
Nickel alloys				
INCONEL 600	NiCr15Fe8	59,3	2,4	[33]
Nimonic 75	(BCR-661)	59,0	8,8	[29]

[a] The reproducibility is expressed as a percentage of the respective mean value of Z for the given material; thus, for the 2024-T 351 aluminium, the absolute value of Z is (30,3 ± 7,2) %.

[b] Some of the values of reproducibility may appear to be relatively high; such values probably indicate the difficulty of reliably measuring the dimensions of the test piece in the necked region of the fracture. For thin sheet test pieces, the uncertainty of measurement of the thickness of the test piece may be large. Likewise, the measurement of the diameter or thickness of the test piece in the necked region is highly dependent upon the skill and experience of the operator.

© ISO 2019 – All rights reserved

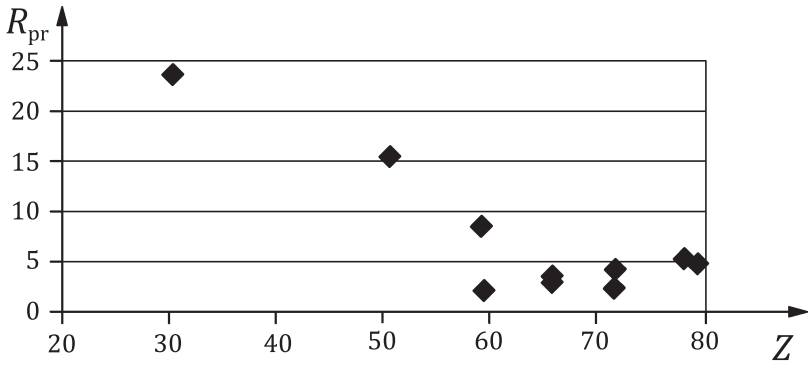

Key

R_{pr} reproducibility, expressed in %

Z reduction of area, expressed in %

Figure L.4 — Presentation of the values given in Table L.4

Licensed copy: Brighton University User, University of Brighton, Version correct as of 10/09/2020

© ISO 2019 – All rights reserved

Licensed copy: Brighton University User, University of Brighton, Version correct as of 10/09/2020

Bibliography

[1] ISO 3183, *Petroleum and natural gas industries — Steel pipe for pipeline transportation systems*

[2] ISO 11960, *Petroleum and natural gas industries — Steel pipes for use as casing or tubing for wells*

[3] ISO/TR 25679, *Mechanical testing of metals — Symbols and definitions in published standards*

[4] ISO/IEC Guide 98-3, *Uncertainty of measurement — Part 3: Guide to the expression of uncertainty in measurement (GUM:1995)*

[5] ISO/TTA 2, *Tensile tests for discontinuously reinforced metal matrix composites at ambient temperatures*

[6] ASTM A370, *Standard test methods and definitions for mechanical testing of steel products*

[7] ASTM E8M, *Standard test methods for tension testing of metallic materials*

[8] ASTM E1012, *Standard practice for verification of test frame and specimen alignment under tensile and compressive axial force application*

[9] CWA 15261-2:2005, *Measurement uncertainties in mechanical tests on metallic materials— Part 2: The evaluation of uncertainties in tensile testing*

[10] DIN 50125, *Testing of metallic materials — Tensile test pieces*

[11] EN 10291, *Metallic materials — Uniaxial creep testing in tension — Methods of test*

[12] GB/T 228, *Metallic materials — Tensile testing at ambient temperature*

[13] IACS W2 Test specimens and mechanical testing procedures for materials. In: *Requirements concerning materials and welding*, pp. W2-1 to W2-10. International Association of Classification Societies, London, 2003. Available (2008-06-26) at: http://www.iacs.org.uk/document/public/publications/unified_requirements/pdf/ur_w_pdf159.pdf

[14] JIS Z2241, *Test pieces for tensile test for metallic materials*

[15] NIS 80:1994, *Guide to the expression of uncertainty in testing*

[16] NIS 3003:1995. *The expression of uncertainty and confidence in measurement*

[17] Dean G.D., Loveday M.S., Cooper P.M., Read B.E., Roebuck B., Morrell R. Aspects of modulus measurement. In: Dyson, B.G., Loveday, M.S., Gee, M.G., editors. *Materials metrology and standards for structural performance*, pp. 150-209. Chapman & Hall, London, 1995

[18] Roebuck B., Lord J.D., Cooper P.M., McCartney L.N., Data acquisition and analysis of tensile properties for metal matrix composites. *J. Test. Eval.* 1994, **22** (1) pp. 63–69

[19] Sonne H.M., Hesse B. B. Determination of Young's modulus on steel sheet by computerised tensile test — Comparison of different evaluation concepts. In: Proceedings of *Werkstoffprüfung* [Materials testing] 1993. DVM, Berlin

[20] Aegerter J., Keller S., Wieser D. Prüfvorschrift zur Durchführung und Auswertung des Zugversuches für Al-Werkstoffe [Test procedure for the accomplishment and evaluation of the tensile test for aluminium and aluminium alloys], In: Proceedings of *Werkstoffprüfung* [Materials testing] 2003, pp. 139-150. Stahleisen, Düsseldorf

[21] Rides M., Lord J. *TENSTAND final report: Computer-controlled tensile testing according to EN 10002-1: Results of a comparison test programme to validate a proposal for an amendment of the standard*. National Physical Laboratory, Teddington, 2005

© ISO 2019 – All rights reserved

Licensed copy: Brighton University User, University of Brighton, Version correct as of 10/09/2020

[22] Lord J., Loveday M.S., Rides M., McEntaggart I. *TENSTAND WP2 final report: Digital tensile software evaluation: Computer-controlled tensile testing machines validation of European Standard EN 10002-1*. National Physical Laboratory, Teddington, 2005, 68 p. Available at: http://eprintspublications.npl.co.uk/3224/

[23] Taylor B.N., Kuyatt C.E. *Guidelines for evaluating and expressing the uncertainty of NIST measurement results.* NIST, Gaithersburg, MD, 1994. 25 p. (*NIST Technical Note 1297.*) Available (2009-07-23) at: http://physics.nist.gov/Pubs/guidelines/TN1297/tn1297s.pdf

[24] Loveday M.S. *Room temperature tensile testing: A method for estimating uncertainty of measurement.* National Physical Laboratory, Teddington, 1999. [*Measurement note* CMMT (MN) 048.] Available (2009-07-23) at: http://eprintspublications.npl.co.uk/2438/

[25] Bell S.A. 1999) *A beginner's guide to uncertainty of measurement*, 2nd edition. National Physical Laboratory, Teddington, 2001. 41 p. (*Measurement Good Practice Guide*, No. 11.) Available (2009-07-31) at: http://eprintspublications.npl.co.uk/1568/

[26] Birch K. *Estimating uncertainties in testing*. National Physical Laboratory, Teddington, 2001. (*Measurement Good Practice Guide*, No. 36.) Available (2009-07-23) at: http://eprintspublications.npl.co.uk/2022/

[27] Kandil F.A., Lord J.D., Bullough C.K., Georgsson P., Legendre L., Money G. et al. *The UNCERT manual of codes of practice for the determination of uncertainties in mechanical tests on metallic materials* [CD-ROM]. EC, Brussels

[28] Sonne H.M., Knauf G., Schmidt-Zinges J. Überlegungen zur Überprüfung von Zugprüfmaschinen mittels Referenzmaterial [Considerations on the examination of course test equipment by means of reference material]. In: Proceedings of *Werkstoffprüfung* [Materials testing] 1996. Bad Nauheim. DVM, Berlin

[29] Ingelbrecht C.D., Loveday M.S., The certification of ambient temperature tensile properties of a reference material for tensile testing according to EN 10002-1: CRM 661. EC, Brussels, 2000. (BCR Report EUR 19589 EN.)

[30] Li H.-P., Zhou X. New Consideration on the uncertainty evaluation with measured values of steel sheet in tensile testing. In: *Metallurgical analysis*, 12th Annual Conference of Analysis Test of Chinese Society for Metals, 2004

[31] Klingelhöffer H., Ledworuski S., Brookes S., May T. *Computer controlled tensile testing according to EN 10002-1 — Results of a comparison test programme to validate a proposal for an amendment of the standard — Final report of the European project TENSTAND — Work Package 4.* Bundesanstalt für Materialforschung und -prüfung (BAM), Berlin, 2005. 44 p. (*Forschungsbericht* [Technical report] 268.) Available (2008-07-01) at: http://www.bam.de/de/service/publikationen/publikationen_medien/fb268_vt.pdf

[32] Loveday M.S., Gray T., Aegerter J. *Tensile testing of metallic materialsA reviewFinal report of the TENSTAND project of work package 1.* Bundesanstalt für Materialforschung und -prüfung (BAM), Berlin, 2004

[33] ASTM Research Report E 28 1004:1994, *Round robin results of interlaboratory tensile tests*

[34] Roesch L., Coue N., Vitali J., di Fant M. *Results of an interlaboratory test programme on room temperature tensile properties — Standard deviation of the measured values*. (IRSID Report, NDT 93310.)

[35] Loveday M.S. Towards a tensile reference material. In: *Loveday, M.S., Gibbons, T.B. Harmonisation of testing practice for high temperature materials*. Elsevier, London, pp. 111–53.

[36] Johnson R.F., Murray J.D., The effect of rate of straining on the 0.2 % proof stress and lower yield stress of steel. In: Proceedings of Symposium on High Temperature Performance of Steels, Eastbourne, 1966. Iron and Steel Institute, 1967

 © ISO 2019 – All rights reserved

Licensed copy: Brighton University User, University of Brighton, Version correct as of 10/09/2020

[37] Gray T.G.F., Sharp J. Influence of machine type and strain rate interaction in tension testing. In: Papirno, R., Weiss, H.C. *Factors that affect the precision of mechanical tests.* ASTM, Philadelphia, PA. (*Special Technical Publication* 1025.)

[38] Aegerter J., Bloching H., Sonne H.-M., Influence of the testing speed on the yield/proof strength — Tensile testing in compliance with EN 10002-1. *Materialprüfung*. 2001, **10** pp. 393–403

[39] Aegerter, J. Strain rate at a given point of a stress/strain curve in the tensile test [Internal memorandum], VAW Aluminium, Bonn, 2000

[40] Bloching H. *Calculation of the necessary crosshead velocity in mm/min for achieving a specified stress rate in MPa/s*. Zwick, Ulm, 2000, 8 p. [Report]

[41] McEnteggart I., Lohr R.D. Mechanical testing machine criteria. In: Dyson, B.G., Loveday, M.S., Gee, M.G., editors. *Materials metrology and standards for structural performance*, pp. 19-33. Chapman & Hall, London, 1995

[42] Austin T., Bullough C., Leal D., Gagliardi D., Loveday M., A Guide to the Development and Use of Standards Compliant Data Formats for Engineering Materials Test Data, CEN CWA 162002010: ftp://ftp.cen.eu/CEN/Sectors/List/ICT/CWAs/CWA16200_2010_ELSSI.pdf

[43] SEP 1235, *Determination of the modulus of elasticity on steels by tensile testing at room temperature*, Stahl-Eisen-Prüfblatt (SEP) des Stahlinstituts VDEh, Düsseldorf

[44] Lord J.D, Orkney L.P Elevated Temperature Modulus Measurements Using the Impulse Excitation Technique (IET). *NPL Measurement Note CMMT*. MN, 2000, pp. 049. Available at: http://eprintspublications.npl.co.uk/3249/

[45] Lord J.D, Orkney L.P Measurement Good Practice Guide No. 98 *Elastic Modulus Measurement,* ISSN 1744-3911 (2006). Available at: http://eprintspublications.npl.co.uk/3782/

[46] Carpenter M*, Nunn J, Impulse Excitation Modulus measurements of Hardmetal Rods using custom software on a standard personal computer and microphone. *Mater. Eval*. 2012, **70** (7) pp. 863–871

[47] Gabauer W, The Determination of Uncertainties in Tensile Testing UNCERT COP 07: 2000

[48] Bullough C. K, The Determination of Uncertainties in Dynamic Young's Modulus UNCERT CoP 13:2000

[49] Lord J., Rides M., Loveday M. *Modulus Measurement Methods* TENSTAND WP3 Final Report NPL REPORT DEPC MPE 016 Jan 2005. ISSN 1744-0262. Available at: http://eprintspublications.npl.co.uk/3223/

[50] Unwin W.C., *The testing of materials of construction*. Longmans, Green & Co, London, 1910, pp. 237–8.

[51] Lord J.D., Roebuck B., Orkney L.P. *Validation of a draft tensile testing standard for discontinuously reinforced MMC*, VAMAS Report No.20, National Physical Laboratory, May 1995

[52] ASTM E 111, *Standard Test Method for Young's Modulus, Tangent Modulus, and Chord Modulus*

[53] Aegerter J., Frenz H., Kühn H.-J., Weissmüller C., ISO 6892-1:2009 Tensile Testing: Initial Experience from the Practical Implementation of the New Standard, Carl Hanser Verlag, München, Vol. 53, (2011) 10, pp. 595-603, correction of Fig. 6 in Carl Hanser Verlag, München, Vol. 53, (2011) 11

[54] Weissmüller C., Frenz H., Measurement Uncertainty for the Determination of Young's Modulus on Steel, Materials Testing, Carl Hanser Verlag, München, 2013, Vol. 55 No. 9, pp. 643-647, available at: http://www.hanser-elibrary.com/doi/pdf/10.3139/120.110482

© ISO 2019 – All rights reserved

[55] ISO 377, *Steel and steel products — Location and preparation of samples and test pieces for mechanical testing*

[56] ISO 2566-1, *Steel — Conversion of elongation values — Part 1: Carbon and low alloy steels*

[57] ISO 2566-2, *Steel — Conversion of elongation values — Part 2: Austenitic steels*

[58] ISO 80000-1, *Quantities and units — Part 1: General*

[59] ISO 23788, *Metallic materials — Verification of the alignment of fatigue testing machines*

Licensed copy: Brighton University User, University of Brighton, Version correct as of 10/09/2020

 © ISO 2019 – All rights reserved

Licensed copy: Brighton University User, University of Brighton, Version correct as of 10/09/2020

This page deliberately left blank

NO COPYING WITHOUT BSI PERMISSION EXCEPT AS PERMITTED BY COPYRIGHT LAW

British Standards Institution (BSI)

BSI is the national body responsible for preparing British Standards and other standards-related publications, information and services.

BSI is incorporated by Royal Charter. British Standards and other standardization products are published by BSI Standards Limited.

Licensed copy: Brighton University User, University of Brighton, Version correct as of 10/09/2020

About us

We bring together business, industry, government, consumers, innovators and others to shape their combined experience and expertise into standards -based solutions.

The knowledge embodied in our standards has been carefully assembled in a dependable format and refined through our open consultation process. Organizations of all sizes and across all sectors choose standards to help them achieve their goals.

Information on standards

We can provide you with the knowledge that your organization needs to succeed. Find out more about British Standards by visiting our website at bsigroup.com/standards or contacting our Customer Services team or Knowledge Centre.

Buying standards

You can buy and download PDF versions of BSI publications, including British and adopted European and international standards, through our website at bsigroup.com/shop, where hard copies can also be purchased.

If you need international and foreign standards from other Standards Development Organizations, hard copies can be ordered from our Customer Services team.

Copyright in BSI publications

All the content in BSI publications, including British Standards, is the property of and copyrighted by BSI or some person or entity that owns copyright in the information used (such as the international standardization bodies) and has formally licensed such information to BSI for commercial publication and use.

Save for the provisions below, you may not transfer, share or disseminate any portion of the standard to any other person. You may not adapt, distribute, commercially exploit or publicly display the standard or any portion thereof in any manner whatsoever without BSI's prior written consent.

Storing and using standards

Standards purchased in soft copy format:

- A British Standard purchased in soft copy format is licensed to a sole named user for personal or internal company use only.
- The standard may be stored on more than one device provided that it is accessible by the sole named user only and that only one copy is accessed at any one time.
- A single paper copy may be printed for personal or internal company use only.

Standards purchased in hard copy format:

- A British Standard purchased in hard copy format is for personal or internal company use only.
- It may not be further reproduced – in any format – to create an additional copy. This includes scanning of the document.

If you need more than one copy of the document, or if you wish to share the document on an internal network, you can save money by choosing a subscription product (see 'Subscriptions').

Reproducing extracts

For permission to reproduce content from BSI publications contact the BSI Copyright and Licensing team.

Subscriptions

Our range of subscription services are designed to make using standards easier for you. For further information on our subscription products go to bsigroup.com/subscriptions.

With **British Standards Online (BSOL)** you'll have instant access to over 55,000 British and adopted European and international standards from your desktop. It's available 24/7 and is refreshed daily so you'll always be up to date.

You can keep in touch with standards developments and receive substantial discounts on the purchase price of standards, both in single copy and subscription format, by becoming a **BSI Subscribing Member.**

PLUS is an updating service exclusive to BSI Subscribing Members. You will automatically receive the latest hard copy of your standards when they're revised or replaced.

To find out more about becoming a BSI Subscribing Member and the benefits of membership, please visit bsigroup.com/shop.

With a **Multi-User Network Licence (MUNL)** you are able to host standards publications on your intranet. Licences can cover as few or as many users as you wish. With updates supplied as soon as they're available, you can be sure your documentation is current. For further information, email cservices@bsigroup.com.

Revisions

Our British Standards and other publications are updated by amendment or revision.

We continually improve the quality of our products and services to benefit your business. If you find an inaccuracy or ambiguity within a British Standard or other BSI publication please inform the Knowledge Centre.

Useful Contacts

Customer Services
Tel: +44 345 086 9001
Email: cservices@bsigroup.com

Subscriptions
Tel: +44 345 086 9001
Email: subscriptions@bsigroup.com

Knowledge Centre
Tel: +44 20 8996 7004
Email: knowledgecentre@bsigroup.com

Copyright & Licensing
Tel: +44 20 8996 7070
Email: copyright@bsigroup.com

BSI Group Headquarters

389 Chiswick High Road London W4 4AL UK

bsi.